Apple-Works Forum

A Publication of **NAUG:** ***The National AppleWorks Users Group***

Volume IX, No. 1 **Five Dollars**

TABLE OF CONTENTS

AppleWorks 4 Primer **2**

- How to link the data base and word processor.
- How to create advanced glossary definitions.

General Interest **9**

- Three publications that can help you repair your printer.
- A special **NAUG** discount on Flash Magazine.

Special Offer **11**

- Special closeout prices on Beagle Bros products.

My Favorite Macro **12**

- A macro that automatically underlines and boldfaces selected text.

My Favorite Template **15**

- How to create a personal organizer.
- How to speed up data entry by using formulas.

Corrections **24**

- Corrections to the ***AppleWorks Forum***.

General Interest **25**

- What advanced users should know about AppleWorks 4.
- Status of existing TimeOut Applications.
- New add-ons for AppleWorks 4.
- A history of AppleWorks enhancements.
- An "Easter Egg" in AppleWorks 4.
- TAPL Memory Addresses for AppleWorks 3.0 and 4.
- Status report: Other AppleWorks enhancements.

Public Domain Update **31**

- Three new disks in the **NAUG** Public Domain Library.

NAUG Membership **32**

Electronic Index Update **32**

NAUG Classifieds **32**

Support for AppleWorks and ///EZ Pieces Users

How to Link the Data Base and Word Processor

by Will Nelken

This is the third in a series of articles that describe the new features of AppleWorks 4. This month's article shows you how to create word processor windows and glossaries that link data base and word processor files in AppleWorks 4. The author assumes that you know the basics of AppleWorks.

AppleWorks 3.0 lets you use its clipboard to transfer data between word processor, data base, and spreadsheet files. That provides a level of integration not available in earlier versions of the program.

AppleWorks 4 broadens this capability by offering relational features that let you "link" and transfer data between files. Specifically, with AppleWorks 4 you can create a linked "word processor window" that can display long passages of text in your data base files. AppleWorks 4 also lets you use "glossaries" to transfer data in the other direction; from data base records into word processor documents.

This article will take you step-by-step through the process of creating windows and glossaries so you become comfortable with these transfers.

Figure 1: Word Processor Window

```
File: NAME.LIST                    WP WINDOW          Escape: Review/Add/Change

Selection: All records


Record 1 of 3  (3 selected)
================================================================================
Brandt, Randy

Randy lives in sparkling Arvada, Colorado. Randy and Joanna have three
children: Heather, Erika and Michael and expect their fourth and fifth
children (twins!) this May. Outside of computing, Randy likes playing,
watching and talking about hockey, basketball, baseball and football. He
also speaks to groups about child sponsorship for Compassion, International.

--------------------------------------------------------------------------------
Use arrows to view H.NAME.LIST                                 12/12/93  8:38 am
```

Word Processor Windows

AppleWorks can accommodate up to 78 characters in a data base category. Although 78 characters is adequate for most applications, this limitation makes it difficult to include descriptive text and notes in a data base record.

AppleWorks 4 overcomes this limitation by letting you link word processor and data base files. That lets you use the word processor to create, edit, and spell check lengthy descriptive notes in a linked file that AppleWorks can display in a "word processor window" along with the data base record. (See *Figure 1* which depicts a word processor window within a data base file. Note the segment of the screen above the equal signs which indicates that you are working with a data base file.)

Teachers can use this feature to record narrative evaluative comments about their students. Medical practitioners and lawyers can use word processor windows to display notes from client visits. Researchers and writers can use these windows to keep a record of their findings.

Figure 2: NAME.LIST Categories

Cat. #	Cat. Name	Description
1	FamName	Last name of family
2	HName	Husband/male first name
3	WName	Wife/female first name
4	Envelope	First part of envelope address, like "Bill & Mary"
5	Address1	Company/organization name
6	Address2	Street address
7	City	City name
8	State	State/province abbreviation
9	Zip	Zip/postal code

Figure 3: NAME.LIST Data

```
FamName: Brandt
HName: Randy
WName: Joanna
Envelope: Randy & Joanna
Address1: JEM Software
Address2: 7578 Lamar Court
City: Arvada
State: CO
Zip: 80003

FamName: Verkade
HName: Dan
WName: Betsy
Envelope: Dan & Betsy
Address1: Clear Night Software
Address2: 51 Bowen Road
City: Perris
State: CA
Zip: 92571

FamName: Nelken
HName: Will
WName: Martha
Envelope: Will & Martha
Address1: Marin MacroWorks
Address2: 1675 Grand Avenue
City: San Rafael
State: CA
Zip: 94901
```

Tutorial 1: Creating Word Processor Windows

Now I suggest that you sit down at your computer and do this tutorial that shows you how to create an AppleWorks 4 data base with a "linked" word processor window. Follow these steps:

1. Press <sa-A> and create a new data base file called NAME.LIST with the nine categories listed in *Figure 2*.
2. Enter the data from *Figure 3* into three new records in the file.
3. Create a new word processor file called H.NAME.LIST. (The word processor file must start with "H." (for "Help") followed by the name of the "linked" data base file.)
4. Enter the markers and the text from *Figure 4* into the file.

   The linked word processor document contains three elements: The "marker" that divides each segment that you will display in the window, the "subject text" that provides the basis for the match when you display the window, and the "text segment" that will appear in the window.

Markers: AppleWorks 4 uses marker 150 to indicate the beginning and end of each section of the help file. To enter the marker, put the cursor on the first letter of each individual's name and press <oa-O><SM><Rtn><150><Rtn><Esc>. AppleWorks adds "Data Base" to the right of the marker.

Subject Text: The text on the line under the marker is the "subject text", which is either (a) the name of a category, or (b) an entry in a record. If you enter a category name, pressing <oa-`> with a data base record on the screen displays a message about the category (see *Figure 5*). If the subject text matches the entry in a record, pressing <oa-W> will display your record-specific text in the word processor window (see *Figure 1*).

The subject text must begin with the first character on the line; do not enter tabs, spaces, or any other characters before the category name or entry. However, you can type text on the same line after the entry.

Text Segment: This is the text that will appear in the word processor window. You can enter formatting commands and as many lines and paragraphs as you want in the document. Except for spaces and tabs, AppleWorks will ignore most formatting commands in your text segment.

Test the Link

Now you will test the link. Continue as follows:

5. Switch to the NAME.LIST data base and tab to the "Envelope" category in any record. Press <oa-`> to open the data base "window" to the help file. (<oa-`> tells AppleWorks to look for the subject text that matches the category name.)

Figure 4: NAME.LIST Text

```
--------Set a Marker: 150   Data Base
Envelope category

This category contains the first name or names as you would like them to appear in an
address label (as on an envelope) before the last or family name, as in:

     Randy & Joanna

It may include the person(s) titles, where appropriate, as in:

     Mr. & Mrs. Randy

--------Set a Marker: 150   Data Base
Brandt, Randy

Randy lives in sparkling Arvada, Colorado. Randy and Joanna have three children:
Heather, Erika and Michael and expect their fourth and fifth children (twins!) this May.
Outside of computing, Randy likes playing, watching and talking about hockey,
basketball, baseball and football. He also speaks to groups about child sponsorship for
Compassion, International.

--------Set a Marker: 150   Data Base
Verkade, Dan

Dan is the AppleWorks developer with the bluest tint -- he owns Compaq and Northstar
computers. Dan and Betsy have three children: Karl, Heidi, and Michelle. Dan was an
accountant for "FOUR, L-O-N-G" years before settling into programming. Dan likes to
spend time with his family, jogging, and playing keyboards (musical, that is) in his
church.

--------Set a Marker: 150   Data Base
Nelken, Will

Will and his wife, Martha, a registered nurse, and their three children (Sarah, Peter,
and Stephen) live in the mission city of San Rafael, along with a dog, two cats and five
computers. Will has pastored Assemblies of God churches in California since 1976. He
also serves as president of Discipleship Dynamics Church Ministries, teaches for a month
each year in Kiev, Ukraine, and serves as presbyter to nineteen local churches.
```

Marker

Text Segment

Subject Text

[Ed: The "`" character shares the tilde (~) key on the keyboard.] Your screen should look like the example in *Figure 5*. Press the Escape Key to re-display the data base record.

6. Use Apple-Tab to move the cursor to the "FamName" category. Press <oa-W> to open the entry help window. (<oa-W> tells AppleWorks to look for the subject text that matches the data base entry.) Your screen should look like the example in *Figure 1*. Then press the Escape Key to return to the data base record.

When you press <oa-`> or <oa-W>, AppleWorks searches all three desktops for a word processor file with the prefix "H." followed by the name of the data base file. If it does not find the file, AppleWorks displays the message: "H.NAME.LIST must be on the desktop". If it finds the file, AppleWorks scans the data for marker 150, then checks the subject text immediately following the marker for a match.

Figure 5: Message about a Category

```
File: NAME.LIST                    WP WINDOW          Escape: Review/Add/Change
Record 1 of 3  (3 selected)
Selection: All records


ID              FamName         HName           WName           Envelope
================================================================================
Envelope category

This category contains the first name or names as you would
like them to appear in an address label (as on an envelope)
before the last or family name, as in:

     Randy & Joanna

It may include the person(s) Titles, where appropriate, as
in:

     Mr. & Mrs. Randy



--------------------------------------------------------------------------------
Use arrows to view H.NAME.LIST                                 12/29/93 10:20 pm
```

If it does not match the data base category name or the text in the category where the cursor rests, AppleWorks looks for the next marker 150. If the subject text matches, AppleWorks displays that section of the help text.

You do not have to enter the complete subject text in your data base record; AppleWorks can recognize a partial match. For example, if you enter "Bran" in the data base, AppleWorks will find "Branham" or "Brandt" in the help file. But the search is case-sensitive; you cannot type "bran" or

"BRANDT" and expect AppleWorks to find "Brandt".

If no match is found, AppleWorks displays the entire help file in the window.

If the text segment is too long to fit on the screen, the Arrow Keys will scroll the text in the window. However, it will not scroll beyond the end of the current section, which is indicated by the next marker 150 in the word processor file.

You can view, but not edit, the text in the word processor window. To edit the text, you must switch to the help file. AppleWorks 4 includes a macro command, <sa-J>, that jumps to the section of the help file you are viewing in the window. Press <sa-J> again and you will return to your original place in the data base file.

Word Processor Glossaries

Now that you know how to display a word processor document in a data base file, you will learn how to transfer data in the other direction – from a data base file into a word processor document. AppleWorks 4's new "glossary" feature accommodates those transfers.

AppleWorks accepts up to eight "glossaries" containing text and command keystrokes that you can invoke with a few keypresses. You can link each glossary to a data base file and use the glossaries to import data from that file into your word processor documents.

The most obvious application is to use a glossary to insert names and addresses in letters. But you can also use a glossary to store boilerplate sentences or paragraphs, or the closing paragraph for your letters. (See *Figure 6*, which shows a glossary in a word processor document.)

The following tutorial will show you how to create and use a glossary that inserts name and address data from your NAME.LIST data base into a letter.

Figure 6: Glossary in a WP Document

```
File: Article                          GLOSSARY          Escape: Review/Add/Change
=====<====<====<====<====<====<====<====<====<====<====<====<====<====<====<===
scroll the text in the window. However, it will not   | Brandt
the current section, which is indicated by the next   | Merritt
processor file.                                       | Nelken
                                                      | Verkade
You can view, but not edit, the text in the WP Windo  | Williams
must switch to the help file. However, AppleWorks 4.
command, <sa-J>, that jumps to the section of the he
in the window. Press <sa-J> again and you will retur
the data base file.

Word Processor Glossaries

Word processor windows display a word processor docu
data base file. AppleWorks 4.0 also lets you use "gl
data in the other direction; from a data base file i
documents.

The program accepts up to eight "glossaries" contain
keystrokes that you can invoke with a few keypresses
glossary to a data base file and use the glossaries
-------------------------------------------------------------------------
Choose a glossary                                                4628K Avail.
```

Figure 7: Edit Rules Screen

```
File: LETTER                           EDIT RULES        Escape: Review/Add/Change
=====<====<====<====<====<====<====<====<====<====<====<====<====<====<====<===

   Glossary menus (global):

   1. Printer Options
   2. Letterhead
   3. Block Name
   4. Title
   5. Closing
   6. <undefined>
   7. <undefined>
   8. <undefined>

   Mail merge (for this WP file):

   9. Merge Data Base        none

-------------------------------------------------------------------------
Type number, or use arrows, then press Return                    4682K Avail.
```

Tutorial 2: Creating a Glossary

Follow these steps to create the glossary:

1. Confirm that the NAME.LIST file is on one of the desktops.
2. Create a new word processor document called LETTER (you can use any AppleWorks-acceptable file name) and press <oa-A> to add or edit

Figure 8: Define Glossary Menu

```
File: LETTER                    GLOSSARY                Escape: Edit rules
=====<====<====<====<====<====<====<====<====<====<====<====<====<====<===

   Menu title: To:

   1. Glossary file    none
   2. List category    none

   3. Prefix text      none

   4. <undefined>
   5. <undefined>
   6. <undefined>
   7. <undefined>
   8. <undefined>
   9. <undefined>
  10. <undefined>
  11. <undefined>
  12. <undefined>
  13. <undefined>

--------------------------------------------------------------------------
Type number, or use arrows, then press Return                 4672K Avail.
```

the glossary rules. AppleWorks will display the Edit Rules Screen in *Figure 7*. You use this screen to access your different glossary files.

As you can see from the figure, AppleWorks 4 includes five sample glossaries.

3. Press "6" and then the Return Key to select the first undefined category. AppleWorks will ask you to give the glossary a title that will appear on the Glossary List when you press <oa-G>. Enter "TO:" and press the Return Key. AppleWorks will display the screen in *Figure 8*.

The "Glossary File" is the name of the data base file that contains the information you will import into your word processor document.

The "List Category" is the category in the glossary file that contains the information AppleWorks will list on your screen when you select the glossary.

The "Prefix Text" will contain any text and commands you want the glossary to type into your document before it enters text from the data base file.

Items #4-13 will contain categories from the glossary file and any text and commands you want to type after each entry.

Now you will define the contents of the "TO:" glossary. Continue as follows:

4. With the cursor on "Glossary file", press the Return Key. A pop-up list of data base files on the desktops will appear to the right; select NAME.LIST.

5. Choose #2, "List category" and select the "FamName" category. That tells AppleWorks to display a list of the contents of the FamName category on your screen when you invoke the Glossary Command (<oa-G>).

AppleWorks will print the contents you enter into "Prefix text" *before* it prints the contents of the first data base category (in menu item #4). Leave the "Prefix text" area set to "none" for now.

Now you will define the data, text, and keystrokes that you want to enter into the word processor documents. Continue as follows:

6. Select #4, choose the "Envelope" category from the pop-up list, and press the Return Key. Then press the Return Key again to tell AppleWorks that you want to enter some trailing text to follow the data from "Envelope".

   Press the Space Bar to enter a space. Then press <oa-rtn> to end the entry.

Now, each time you choose this Glossary item and select a family name, AppleWorks will enter the data in the "Envelope" category of the same record, followed by a space.

If you make a mistake in a "suffix" entry, press <oa-rtn> to end the entry and press the Return Key to start over.

7. Select #5, define the contents as "FamName" and add a Return. Then press <oa-rtn>. The keystrokes are 5 <rtn><rtn><rtn><rtn><oa-rtn>.

If you make a mistake, return to the Glossary screen, highlight the erroneous category and press the Delete Key. To re-define all the categories, select #2 "List category", select "FamName" from the pop-up list, and re-define your entries.

8. Select #6, define the contents as "Address1", and add a Return. Then press <oa-rtn>.

9. Select #7, define the contents as "Address2", and add a Return. Then press <oa-rtn>.
10. Select #8, define the contents as "City", and add a comma and a space. Your screen will display:

```
Enter keystrokes for: City
    ,<spc>
```

Then press <oa-rtn>.

11. Select #9, define the contents as "State", add two spaces, and press <oa-rtn>.
12. Select #10, define the contents as "Zip", add two Returns, and press <oa-rtn>.

Your Glossary screen should look like the example in *Figure 9*.

Figure 9: Sample Glossary

```
File: LETTER                    GLOSSARY                Escape: Edit rules
=====<====<====<====<====<====<====<====<====<====<====<====<====<====<===

   Menu title: To:

   1.  Glossary file    NAME.LIST
   2.  List category    FamName

   3.  Prefix text      none

   4.  Envelope         <spc>
   5.  FamName          <rtn>
   6.  Address1         <rtn>
   7.  Address2         <rtn>
   8.  City             ,<spc>
   9.  State            <spc spc>
  10.  Zip              <rtn rtn>
  11.  <undefined>
  12.  <undefined>
  13.  <undefined>

-------------------------------------------------------------------------
Type number, or use arrows, then press Return                 4616K Avail.
```

13. Press the Escape Key twice to exit the Glossary Edit Menu and return to the word processor document.
14. Test your new Glossary by pressing <oa-G>. Select "TO:", then select "Brandt" from the pop-up list. AppleWorks will enter the following into your document:

```
Randy & Joanna Brandt
JEM Software
7578 Lamar Court
Arvada, CO  80003
```

Glossaries without Data Base Files

Glossaries can also insert boilerplate text and commands in your documents. Try this example to create a glossary that enters your name into a document:

1. Open the Glossary Edit Menu by pressing <oa-A>.
2. Select #7 and enter the menu title, "My Name".

Now you will enter text and commands without a reference to a glossary file. Continue as follows:

3. Select #3, "Prefix text" and type your full name. End your entry by pressing <oa-rtn>. Your screen will look like this:

```
Menu title: My Name
1. Glossary file     none
2. List category     none
3. Prefix text       William<spc>C.<spc>Nelken
```

4. Return to the word processor file by pressing the Escape Key twice. Then press <oa-G> and select "My Name". AppleWorks will type your name into the document.

Another Application

AppleWorks 4's support for word processor glossaries expands the role of the program's data base module. For example, try the following tutorial that stores letterhead information in a data base file and uses a glossary to create customized letterheads from the records in that file.

1. Press <sa-A> and create a new word processor file called "LETTER.2".
2. Press <sa-A> again and create a new data base file called "MY.GLOSSARY" with four categories.
3. Rename the first category "Headings" and press the Escape Key.

Now you will enter two names and addresses in the MY.GLOSSARY file. Continue as follows:

4. Enter a descriptive title for the heading, like "My Letterhead".
5. Enter your complete name in "Cat2".
6. Enter your street address in "Cat3".

Advanced Glossary Definitions

Data base files used as glossaries can include AppleWorks commands in addition to text. That lets you create "dedicated" data base files that enter both text and keystroke commands into your word processor document.

For example, this entry in a data base record:

```
Headings: My Letterhead
Cat2: William C. Nelken
Cat3: @Oci^M17^M^[1675 Grand Avenue
Cat4: San Rafael, CA 94901^M(415) 459-0845
```

produces the following results in a word processor file:

```
--------Centered
                |William C. Nelken|
--------Chars per Inch: 17 chars
                 1675 Grand Avenue
               San Rafael, CA 94901
                  (415) 459-0845
--------Unjustified
```

The commands preceding the address in Cat3 tell AppleWorks to execute the following keystrokes:

```
<oa-O>CI<rtn>17<rtn><esc>
```

You can use the following codes in the data base categories to access AppleWorks 4 commands:

Code	Result
^	Control Key
^M	Carriage return
^[	Escape Key
^I	Tab Key
^H	Left arrow
^U	Right arrow
^J	Down arrow
^K	Up arrow
@	Open Apple Key

The AppleWorks 4 "/EXTRAS" disk includes a data base file in the "FILES" subdirectory called "AWP. Glossary". That file presents some sophisticated examples of glossary entries.

7. Enter your city, state, and Zip Code in "Cat4".
8. Press <oa-Down> to create a second record. Then enter "Friend" for the heading and enter the name and address of one of your friends or relatives.

Now you will set up the glossary rules. Continue as follows:

9. Return to the word processor file and press <oa-A> to display the Glossary Edit Menu.
10. Select #8 and enter the menu title "Headings".
11. Choose "MY.GLOSSARY" for the "Glossary file".
12. Choose "Headings" for the "List category".
13. Choose #3 and type <ctrl-C ctrl-B> for the "Prefix text". Then press <oa-rtn>. That tells AppleWorks to center your letterhead and to turn on boldface.
14. Define #4 as "Cat2" and enter <ctrl-B rtn> as the "text after". That tells AppleWorks to type your name, turn off boldface, and go to the next line.
15. Define #5 as "Cat3" and enter a <rtn> after the category. That will enter your street address and go to the next line.
16. Define #6 as "Cat4" and type <rtn ctrl-N rtn>. That types the rest of your address, turns off centering, and enters a blank line.
17. Press the Escape Key twice to return to the LETTER file and press <oa-G>. Select "Headings" from the glossary pop-up list, choose "My Letterhead" from the next list, and AppleWorks will enter your letterhead.

Conclusion

You now know how to create word processor windows and glossaries that can link your word processor and data base files. The next article will show you how to use some of AppleWorks 4's new spreadsheet features.

*[Will Nelken is the pastor of a church in San Rafael and the author of **Ultra – to the Max!**, a comprehensive tutorial for TimeOut UltraMacros. Mr. Nelken's next article will appear in the March 1994 issue of the **AppleWorks Forum**.]*

*[Working copies of the templates described in this article appear on this month's issue of **NAUG on Disk**. The templates require AppleWorks 4. **NAUG on Disk** (3.5-inch disk) costs $10 from **NAUG**.]*

Publications that Can Help You Repair Your Printer

by Phil Shapiro

For nearly two decades the Apple II spirit has nurtured the do-it-yourself ethic among computerists. But at no time is this ethic more crucial than when a recalcitrant printer refuses to do its job. As if obeying Murphy's Law, problems always occur as a deadline nears. However, with perseverance and the appropriate books and tools, you can tackle the most perplexing printer problem.

Figure 1: Diagram from Bigelow Book

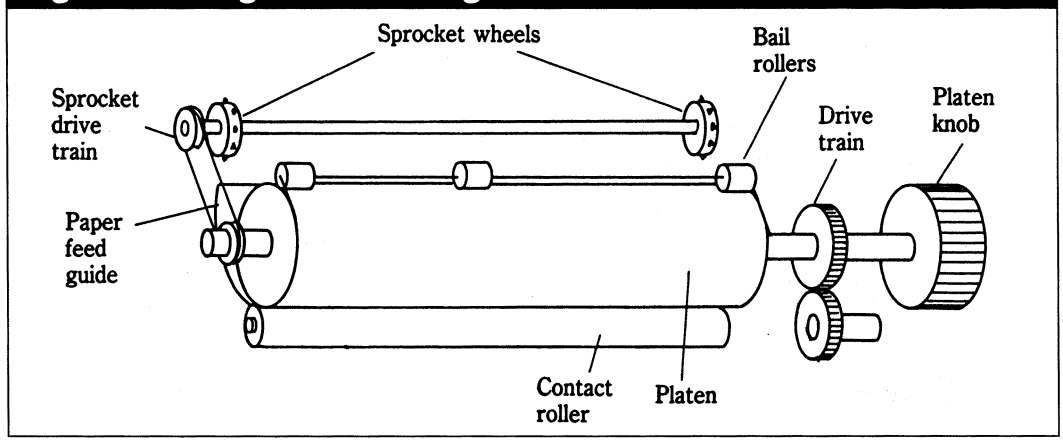

General Reference

You can begin with Stephen J. Bigelow's *Maintain and Repair Your Computer Printer and Save a Bundle*. Written for novices, Bigelow's eight easy-to-understand chapters and four appendices describe the operation of dot-matrix, daisywheel, thermal, ink jet, and laser printers. Dozens of line drawings help clarify the text, and many of the diagrams display the mechanisms that most often need repair. (*Figure 1*, which depicts a tractor feed paper transport assembly, is one example.)

The Bigelow book also includes troubleshooting guidelines that can help you distinguish between electrical and mechanical problems. The author uses empty, partially filled, and fully filled circles to grade the aptitude required to troubleshoot and correct each problem. The icons look like the product rating symbols you see in *Consumer Reports* magazine.

The most valuable chapter in the book describes routine maintenance procedures that can help prevent printer breakdowns. Bigelow describes how to change the space between print head and platen, adjust the tension in the print head transport belt, clean the paper transport, and other procedures that we usually ignore until our printer fails.

However, despite its title, Bigelow's text is more a primer on printer technology than a stepwise repair guide. And whether you can "save a bundle" is debatable. The book favors basic over applied science. For example, Bigelow explains the theory behind dot-matrix printing but does not tell you how to remove the print head from your printer. Although Bigelow tells you to clean the print head wires by "gently extend(ing) each print wire one at a time," he doesn't tell you how to extend the wire. And the diagrams depict a hypothetical, generic printer and are of questionable value when you want to troubleshoot and repair a particular printer.

The book's lack of specifics makes it difficult to repair a printer without the original manual or another, more specific reference to guide you. But

Figure 2: Diagram from Sams Manual

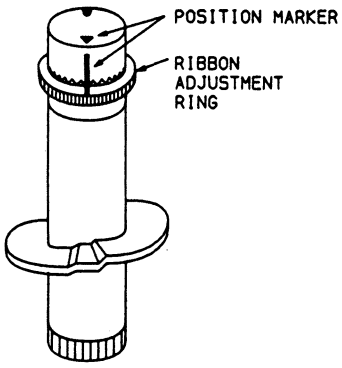

Figure 3: Diagram from Flash Magazine

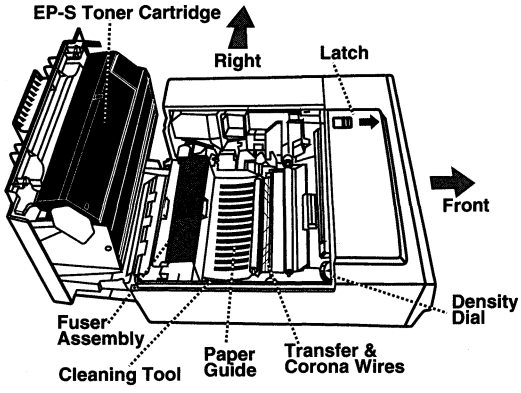

even if you cannot repair your printer with Bigelow's book alone, you will walk away with a solid understanding of how your printer works.

Technically Speaking

In contrast to Bigelow's generic text is Howard W. Sams' detailed *Computer Facts Technical Service Manual for the ImageWriter II*. If your ImageWriter II needs repair and you don't mind spending time with a digital multimeter, logic probe, and soldering iron, this guide is for you. The 40-plus page Sams manual provides complete ImageWriter schematics, a half-dozen photographs that label the printer parts, and a complete parts list.

This guide is exhaustive. A sample paragraph begins, "[If the] Print Head (M4) does not work or dots are missing. Check the Print Head wires for dirt." Most other guides might suggest the same. But the Sams guide continues, "Check Print Head Ribbon Cable for tears and check Connectors CN2, CN2A, CN5, and CN5A for good connections. Check resistance of Print Head Solenoid windings (3 ohms each winding). If no problems are found, turn Printer On and insert paper. Type in and run the following Basic program or push the Form Feed button down while turning the Printer On to keep the Printer printing continuously." Diagrams show you the location of each of the connectors and numbered parts mentioned in the text. The incorrect punctuation and capitalization throughout the manual does not detract from its usefulness.

The Sams manual also describes how to replace the three fuses in the ImageWriter, how to check the motors, and how to adjust the tension of the print head carrier belt. Knowing how to adjust the ribbon shift cam (see *Figure 2*), is useful if you do a lot of color printing.

Ongoing Maintenance

Flash magazine, a bimonthly publication that describes itself as "the premier journal of desktop printing," contains informative articles written in a conversational style that is reminiscent of the *Whole Earth Catalog*. The magazine focuses on hands-on desktop publishing projects, including those that involve printer maintenance and repair.

For example, "Fuser Roller Repairs," an article in the June 1993 issue of Flash, describes how to replace the fuser roller in laser printers that use a Canon SX engine. (That includes many of the Hewlett-Packard LaserJets, Apple LaserWriters, and other brands of printers.) My local repair shop quotes more than $650 to make this repair, but the article shows you how to remove and install a rebuilt fuser assembly that you can buy for $50. The article includes clearly labeled photographs and diagrams like the example in *Figure 3*.

Each issue of Flash also includes desktop publishing tutorials that describe projects as wide-ranging as using color foils to enliven a black and white page and creating etched glassware with a laser printer.

Even though Flash approaches desktop publishing from a Macintosh/PC slant, Apple II enthusiasts will find valuable nuggets within its pages.

Resources

Computer Facts Technical Service Data #CP27: Apple ImageWriter II. Howard W. Sams & Company, 2647 Waterfront Pkwy., E. Drive, Indianapolis, Indiana 46214; (800) 428-7267; Fax: (800) 552-3910; (317) 298-5408. $24.95. *[Sams also publishes technical service manuals for the original ImageWriter and for Apple II, II Plus, IIe, and IIc computers. A complete catalog costs $5.95 postpaid; add $6 for international shipping.]*

Flash Magazine. BlackLightning Publishing, Riddle Pond Road, West Topsham, Vermont 05086. Fax: (802) 439-6463; CompuServe: 73130,1734. $15 per year (6 issues). Until April 15, 1994 **NAUG** members can get a two-year subscription to *Flash* for $20. Identify yourself as a **NAUG** member and provide your **NAUG** membership number for this special discount. Also ask about the *Flash Compendium*, a collection of the best articles published in *Flash* for $12.95 plus $2 s/h.

Maintain & Repair Your Computer Printer and Save a Bundle. 1992. Stephen J. Bigelow. Windcrest Books/McGraw Hill, Blue Ridge Summit, Pennsylvania 17294; (800) 722-4726, (717) 794-2191; Fax: (609) 426-5924. ISBN 0-8306-3507-6. 228p. $16.95.

Conclusion

The Bigelow book, Sams guide, and Flash Magazine serve different purposes. *Maintain and Repair Your Computer Printer and Save a Bundle* is a clearly-written treatise on printer theory. It is an excellent acquisition for libraries and for users who want to understand what is going on inside their printer.

Individuals and organizations with ImageWriter II printers and the tools necessary to fix them should consider the Sams guide. It gives the specific instructions you need to fix this printer.

And anyone who owns a laser printer and enjoys desktop publishing projects should consider subscribing to Flash Magazine. Learning how to perform just one printer repair will pay for a multi-year subscription to this excellent magazine.

[Phil Shapiro is the president of Balloons Software, an Apple II educational software company. He can be reached at Balloons Software, 5201 Chevy Chase Pkwy., NW, Washington, DC 20015, (202) 244-2223 or via electronic mail on GEnie at p.shapiro1 or on America Online at pshapiro.]

Special Closeout Prices for NAUG Members

Here are special closeout prices on Beagle Bros products from **NAUG**:

Product	List Price	Closeout Price
GS Desk Accessories*	$89.95	$19.95
BeagleWrite GS*	99.95	24.95
IIGS Font Library†	49.95	16.95
Apple IIGS Clipart*	49.95	16.95
BeagleWrite#	79.95	19.95
BeagleWrite Desk Accessories‡	39.95	13.95
BeagleWrite Picture Manager‡	39.95	13.95
BeagleWrite FontPack Vol. 1‡	39.95	13.95
BeagleWrite FontPack Vol. 2‡	39.95	13.95
BeagleDraw*	89.95	19.95
Program Writer	49.95	16.95

* *For Apple IIGS*
† *For Apple IIGS, Publish It!, or TimeOut SuperFonts*
\# *For Apple IIe, IIc, or IIc+*
‡ *Requires BeagleWrite*

Add $3.50 s/h per product. Supplies are limited. Credit card orders only. No guarantees other than to replace defective media at these closeout prices. You can call the **NAUG** office for a brief description of these products; they are sold on a first come, first served basis. Telephone and fax orders recommended at these special prices.

AppleWorks Forum

Editor: Cathleen Merritt
Associate Editor: Warren Williams
Contributing Editor: Cynthia Field
Page Layout: Nanette Luoma
Publisher: The National AppleWorks Users Group

*©COPYRIGHT 1994, by **NAUG,** The **National AppleWorks Users Group,** for the exclusive use and enjoyment of its members. Any reprint or reproduction must be approved in writing and in advance by **NAUG.***

*The "**AppleWorks Forum**" (ISSN 0893-4118) is published ten times annually for $30 per year by the National AppleWorks Users Group, 49068 Harvest Dr., Plymouth, MI 48170.*
Second Class postage paid at Plymouth, MI, and additional mailing offices.
POSTMASTER: Send address changes to AppleWorks Forum,

How to Underline and Boldface Selected Text

by Keith Johnson

Many of the macros published in the ***AppleWorks Forum*** perform complex operations that require many keystrokes. For example, consider the macro that deletes duplicate data base records. *[Ed: The duplicate records macro appeared in the June 1992 issue of the* ***AppleWorks Forum****.]* That sophisticated macro can save data base users considerable time and effort.

Other macros seem less significant, but still contribute to the convenience and ease-of-use of AppleWorks. This month's macro falls into that simple-to-do-but-makes-AppleWorks-easier category.

Underlining and boldfacing text is easy in AppleWorks. But the process takes numerous keystrokes as you position and re-position the cursor and issue the necessary commands. The macro in *Figure 1* speeds up the task by letting you underline or boldface a word, line, or block of text with a few keystrokes. I adapted the macro from the work contributed by **NAUG** member Eugene Wingert.

How to Use the Macro

Follow these steps to use the macro:

1. Type the macro into your macro file.
2. Compile the file and save it as your default macro set. *[Ed.: Step-by-step directions for adding the macro to your default macro set appear in the sidebar entitled "How to Add a Macro" in the April 1993 issue of the* ***AppleWorks Forum****.]*
3. Put the cursor anywhere on the line or at the beginning of the word or block you want to underline or boldface. Then press <sa-W>. A message will ask you to choose underline or boldface. Press L or B to choose; press the Escape Key to cancel the macro.
4. A message will ask if you want to perform the operation on the current word, a block of text, or a line. Press W, B, or L. Once again, pressing the Escape Key cancels the macro.
5. If you chose W or L, the macro will insert the commands that underline or boldface the current word or line. If you chose B, a message will direct you to move the cursor to the end of the block you want to underline. Move the cursor and then press the Return Key. The macro will insert the commands that underline or boldface your text.

   If you choose "Block", make certain you move the cursor to a point after its original position; otherwise, the macro will insert two "Underline Begin" or "Boldface Begin" commands and no "End" command.

Some Notes

The macro does not do any error checking, so you should confirm its accuracy, particularly when you work on long lines and one-word lines. For example, when you underline or boldface a long line, the last word may not get underlined or the end token may end up on the following line. This happens because the inserted tokens take up space on the line. That can "bump" the last word of the line down onto the next line. Check the placement of the commands, but do not worry if a word moves to the next line; AppleWorks deletes the tokens when you print your document.

Figure 1: Macro that Underlines or Boldfaces Selected Text

```
W:<awp><                                  { Define the macro.                                    }
 insert:                                  { Switch to the insert cursor.                         }
 msg '  <L> Underline  <B> Boldface  <Esc> Cancel  ': { Display a message listing the options.    }
 begin:                                   { Begin a loop that gets the user's choice.            }
  k=key:                                  { Get a keypress.                                      }
  if k=27 msg '':                         { If the user pressed Escape, erase the message...     }
   endmacro:endif:                        { ...and end the macro.                                }
  if k=76 or k=108:                       { If the user chose "Underline"...                     }
   $1=chr$ 12:                            { ...set the option character to Ctrl-L...             }
   exit:endif:                            { ...and skip to the next section.                     }
  if k=66 or k=98:                        { If the user chose Boldface...                        }
   $1=chr$ 2:                             { ...set the option character to Ctrl-B...             }
   exit:endif:                            { ...and skip to the next section.                     }
  rpt:                                    { Repeat the loop if the keystroke was not a legal choice. }
 msg '  <W>ord  <B>lock  <L>ine  <Esc> Cancel  ': { Display a message listing the section types.  }
 begin:                                   { Begin a loop that gets the user's choice.            }
  k=key:                                  { Get a keypress.                                      }
  if k=27 msg '':                         { If the user pressed Escape, erase the message...     }
   endmacro:endif:                        { ...and end the macro.                                }
  if k=87 or k=119:                       { If the user chose "Word"...                          }
   msg '':                                { ...erase the message...                              }
   right:oa-left:                         { ...move to the first character of the word...        }
   print $1:                              { ...insert the option character...                    }
   sa-.:                                  { ...move to the end of the word...                    }
   print $1:                              { ...insert another option character...                }
   endmacro:endif:                        { ...and end the macro.                                }
  if k=66 or k=98:                        { If the user chose "Block"...                         }
   msg '':                                { ...erase the message...                              }
   print $1:                              { ...insert the option character...                    }
   msg " Move cursor, then press <Return> ": { ...display the message giving instructions...     }
   input:                                 { ...accept the cursor movements by the user...        }
   msg '':                                { ...erase the message when the user is finished...    }
   print $1:                              { ...insert the option character...                    }
   endmacro:endif:                        { ...and end the macro.                                }
  if k=76 or k=108:                       { If the user chose "Line"...                          }
   msg '':                                { ...erase the message...                              }
   first:                                 { ...move to the start of the line...                  }
   print $1:                              { ...insert the option character...                    }
   last:oa-left:sa-.:                     { ...move to the end of the line...                    }
   print $1:                              { ...insert the option character...                    }
   endmacro:endif:                        { ...and end the macro.                                }
  rpt>!                                   { Repeat the loop if the user did not make a legal choice. }
```

Macro programmers should enjoy working with this macro; they can use the commands and logic as a basis for macros that perform other operations, such as deleting text. ■

[Keith Johnson is Associate Director of the Fleischmann Planetarium at the University of Nevada.]

[Rev. Eugene Wingert is Executive Director of Kenbrook Bible Camp in Lebanon, Pennsylvania, where he uses Apple II computers extensively in the administrative and educational programs supported by the Brethren in Christ.]

[A working copy of this macro appears on this month's issue of ***NAUG on Disk****, which costs $10 from* ***NAUG****. The macro requires AppleWorks 3.0 enhanced with UltraMacros 3.1.* ***NAUG on Disk*** *requires a 3.5-inch disk drive.]*

AppleWorks® 4.0

More power. More speed. Easier to use.

OVER 100 NEW AND IMPROVED FEATURES

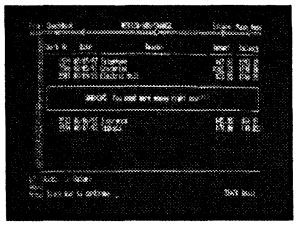

NEW IN THE SPREADSHEET

Create and edit your own pop-up Alert Dialog Boxes in your spreadsheets. Give yourself valuable warnings about errors in formulas or if your checkbook is out of balance.

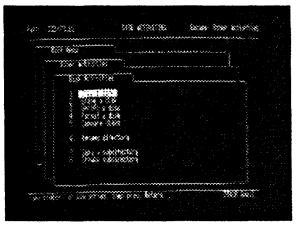

NEW ON THE DESKTOP

The new Disk Activities, File Activities, and clipboard editing menu options give you more control over AppleWorks than ever before.

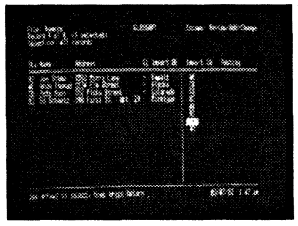

NEW IN THE DATA BASE

Build a Pop-Up Glossary in the Data Base of commonly used data, like state abbreviations, area codes, salutations, closings, and more.

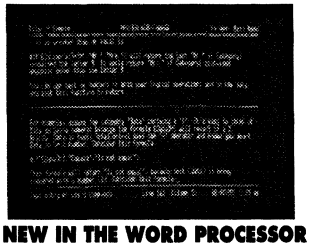

NEW IN THE WORD PROCESSOR

AppleWorks 4.0 gives you a split-screen function in the Word Processor, allowing you to view one part of your document and work on another. It's great for keeping your writing consistent!

AppleWorks is a registered trademark of Apple Computer, Inc. licensed to Quality Computers.

UPGRADE FROM v.3 TO v.4

Just $79.95

30-DAY MONEY-BACK GUARANTEE

ABSOLUTELY YOUR LAST CHANCE FOR...

$5 off

the AppleWorks 4.0 upgrade from version 3.0

Offer expires 1/31/94

Mention Code: AWNG

THE VERDICT IS IN!

"Great job, QC! First class all the way!"
—William Plotnik

"AppleWorks 4 has made me a lot more productive."
—Julie McGuire

"Worth every penny."
—Tom Patterson

"With AppleWorks 4 and a few TimeOut modules, my Apple IIe does everything I need."
—Scott Tompkins

"I give AppleWorks 4 five stars."
—Audrey Sheppard

"I cancelled my order for a Macintosh when I got AppleWorks 4."
—A. Spencer Hempton

$19.95 with purchase of AppleWorks 4.0. (reg. $29.95)

TUTORIAL VIDEO
EXPLORING APPLEWORKS 4.0: TIPS FROM THE PROS

Learn the ins and outs of AppleWorks 4.0 from the people who developed it—Randy Brandt and Dan Verkade. You'll learn the tips and tricks that will open a whole new world of AppleWorks to you.

ORDER NOW TO GET THE VIDEO "ENHANCING APPLEWORKS" FREE

Quality Computers™

1-800-777-3642

20200 Nine Mile Rd. • St. Clair Shores, MI 48080 • (313) 774-7200 • Fax (313) 774-2888

How to Create a Personal Organizer

by Mitchell Bernstein and Cynthia E. Field

This month's favorite template uses the AppleWorks 3.0 spreadsheet to create a personal organizer that tracks holidays, birthdays, anniversaries, and appointments. The template prints a monthly calendar of events and can also serve as a perpetual calendar. The authors assume that you know the basic AppleWorks commands.

Fluency with acronyms is second nature for computer users. You know about RAM and ROM, but do you know "PIM", which stands for "personal information manager"? PIMs are programs that help you manage your time by tracking your appointments, birthdays, anniversaries, and other special occasions. This month's article describes how to create your own AppleWorks PIM.

The template can create a monthly printout with days, dates, "special days" (such as birthdays), and appointments. You record personal information and events in two well-defined data entry areas and AppleWorks automatically creates a calendar of events like the sample in *Figure 1*.

The template also serves as a perpetual calendar. Enter a number for any month and year from 1901 through 2099, press Apple-K, and the template displays the days of the week for that month. That lets you determine the day of the week you were born or the day of the week that your birthday will occur in the year 2000.

Figure 1: Sample Output from AppleWorks PIM

```
MONTH        1<--Enter the month as a number from 1 to 12.
YEAR      1994<--Enter the year as a four-digit number.

                                        1994,  JANUARY
   Day     Date  | Holidays & Special Days  |        Appointments
========= ====  | ========================= | =========================
Saturday     1  | New Year's Day            | Rose Bowl Party at John's

Sunday       2  |                           |

Monday       3  |                           |

Tuesday      4  |                           |

Wednesday    5  |                           | Dentist - 10 am

Thursday     6  |                           |

Friday       7  |                           | Piano Lesson - 3:15 pm

Saturday     8  |                           |

Sunday       9  |                           |

Monday      10  |                           |

Tuesday     11  |                           |

Wednesday   12  |                           | PTA Meeting - 7:30 pm

Thursday    13  |                           |

Friday      14  |                           |

Saturday    15  | Jack's Birthday (45th)    |

Sunday      16  |                           |

Monday      17  |                           |
```

Figure 2: "Map" of Complete PIM

A

```
=====A=====C===D==========E==========F==========G==========
01|          1<--Enter the month as a number from 1 to 12.
02| YEAR     1994<--Enter the year as a four-digit number.
03|
04|                        1994,  JANUARY
05|   Day    Date | Holidays & Special Days | Appointments
06| ========= ==== ========================== ==========================
07| Saturday    1 | New Year's Day           | Rose Bowl Party at John's
08|
09| Sunday      2 |
10|
11| Monday      3 |
12|
13| Tuesday     4 |
14|
15| Wednesday   5 |                          | Dentist - 10 am  9
16|
17| Thursday    6 |
18|
19| Friday      7 |                          | Piano Lesson - 3:15 pm
20|
21| Saturday    8 |
22|
23| Sunday      9 |
24|
25| Monday     10 |
26|
27| Tuesday    11 |
28|
29| Wednesday  12 |                          | PTA Meeting - 7:30 pm
30|
31| Thursday   13 |
32|
33| Friday     14 |
34|
35| Saturday   15 | Jack's Birthday (45th)
36|            27 |
62|
63| Saturday   29 |                          | Class Reunion - 3 pm
64|
65| Sunday     30 |
66|
67| Monday     31 |
68|
69|
70|
71|
72|
73|
74|
```

D

```
75|  1
76|  2
77|  3
78|  4
79|  5
80|  6
81|  7
82|  8
83|  9
84| 10
85| 11
86| 12
87| 13
88| 14
89| 15
90| 16
91| 17
92| 18
93| 19
94| 20
95| 22
96| 23
97| 24
98| 25
99| 26
```

B

```
=========J==================K=====L===M==========N==========O=========
                DATA ENTRY                          DATA ENTRY
   Holidays & Special Days                        Appointments
   ========================                       ==========================
 1 New Year's Day            JANUARY    1   1 Rose Bowl Party at John's
 2                                          2
 3                                      2   3
 4                                          4
 5                                      3   5
 6                                          6
 7                                      4   7
 8                                          8
 9                            JANUARY   5   9 Dentist - 10 am
10                                         10
11                                      6  11
12                                         12
13                                      7  13 Piano Lesson - 3:15 pm
14                                         14
15                                      8  15
16                                         16
17                            JANUARY   9  17
18                                         18
19                                     10  19
20                                         20
21                                     11  21
22                                         22
23                                     12  23 PTA Meeting - 7:30 pm
24                                         24
25                            JANUARY  13  25
26                                         26
27                                     14  27
28                                         28
29 Jack's Birthday (45th)              15  29
53
56
57                            JANUARY  29  57 Class Reunion - 3 pm
58                                         58
59                                     30  59
60                                         60
61                                     31  61
62                                         62
63                            FEBRUARY  1  63
64                                         64
65                                      2  65
66                                         66
67                                      3  67
68                                         68
69                                      4  69
70                                         70
71                            FEBRUARY  5  71
72                                         72
73                                      6  73
74                                         74
75                                      7  75
76                                         76
77                                      8  77
78                                         78
79                            FEBRUARY  9  79
80                                         80
81                                     10  81
82                                         82
83                                     11  83
84                                         84
85                                     12  85
86                                         86
87                            FEBRUARY 13  87
88                                         88
90                                         90
91                                     15  91
92                                         92
93                                     16  93
94
```

C

```
=====P=======Q=======R=======S=======T=======U=======V=======W=======X=======Y=======Z=======AA=======
                     0       7

 1 Sunday        1 JANUARY                10      3      6      8      4      6      9
 2 Monday        2 FEBRUARY        1      2      3      4      5      6      7      8
 3 Tuesday       3 MARCH           7      3      3      6      1      4      6      2
 4 Wednesday     4 APRIL
 5 Thursday      5 MAY
 6 Friday        6 JUNE
 7 Saturday      7 JULY
 8 Sunday        8 AUGUST
 9 Monday        9 SEPTEMBER
10 Tuesday      10 OCTOBER
11 Wednesday    11 NOVEMBER
12 Thursday     12 DECEMBER
13 Friday
14 Saturday      1        1
15 Sunday        2       63
16 Monday        3      121
17 Tuesday       4      183
18 Wednesday     5      243
19 Thursday      6      305
20 Friday        7      365
21 Saturday      8      427
22 Sunday        9      489
23 Monday       10      549
24 Tuesday      11      611
25 Wednesday    12      671
26 Thursday
27 Friday        0        6
28 Saturday      1        7
29 Sunday        2        1
30 Monday        3        2
31 Tuesday       4        4
32 Wednesday     5        5
```

Key:

- **A** Monthly Calendar
- **B** Yearly Calendar: Data Entry Area
- **C** Lookup Tables and Calendar Forumulas
- **D** Extract of Yearly Calendar

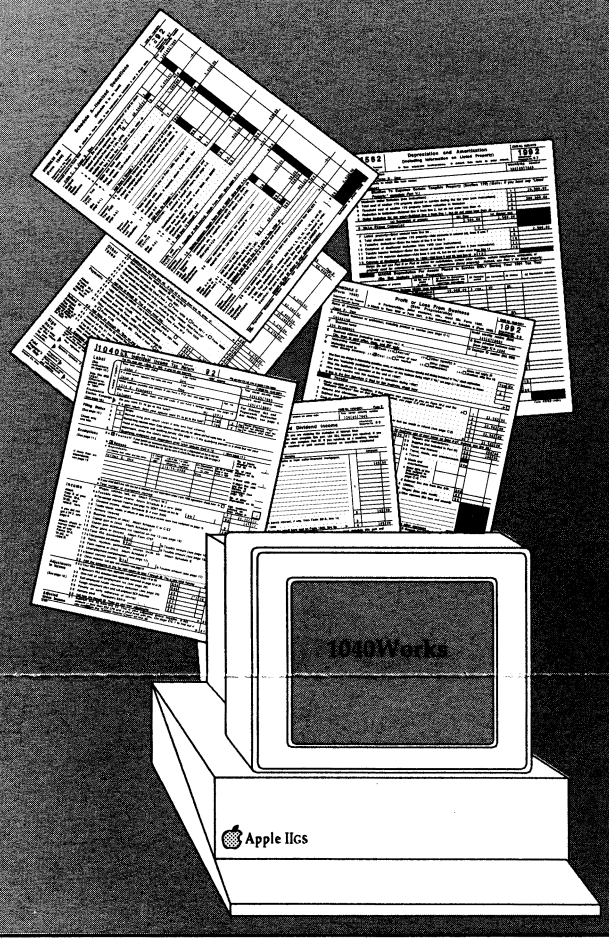

Now in its 9th year!

1040Works

– fast!
– accurate!
– easy-to-use!

Doing Your Taxes

Nobody looks forward to doing their taxes, but this year you can use AppleWorks and 1040Works to make your job easier … and even fun.

1040Works is a set of professionally developed AppleWorks templates that compute your Federal Income Tax. You load the files on the AppleWorks desktop, fill in the blanks, and watch 1040Works do its magic. 1040Works prepares and prints 23 of the most widely used Federal Income Tax schedules and forms.

We don't promise that you'll get a tax refund or enjoy doing your taxes, but we do guarantee that you will be satisfied with 1040Works or we will give you a complete refund.

1040Works costs $32.95 plus $3.50 s/h; **NAUG** members receive a $3 discount.

Owners of earlier versions of the program can use the special order form they received in the mail to update to the 1993 templates for $22.95 plus $3.50 s/h. Also see the special **NAUG** offer for the 1040Works Tax Planner on the back of this page.

1040Works, which will ship on February 8, 1994, is compatible with AppleWorks 2.0 or later and runs on any Apple II or Apple II-compatible computer that provides at least a 230K AppleWorks desktop. (Owners of 128K Apple II systems should see NAUG's special offer on memory upgrades elsewhere on this insert.)

Schedules and Forms

1040Works completes the following Federal Income Tax schedules and forms:

1040	D	SE	2441	8283	8615
A	E	2106	3903	8582	8814
B	F	2119	4562	8582-CR	8829
C	R	2210	6251	8606	

1040Works Tax Planner

Special Discount Price!

Here is a special offer for the **1040Works Tax Planner**, a comprehensive set of easy-to-use tax planning templates for AppleWorks. The Tax Planner estimates your Federal Income Tax for 1994-1996, calculates how much you should withhold from earnings and savings, calculates your quarterly tax payments, and compares alternative financial strategies to legally minimize your federal tax liabilities. The 1040Works Tax Planner also determines whether you will be affected by the Alternative Minimum Tax and calculates the amount of that tax. Includes complete documentation.

The 1040Works Tax Planner lists for $29.95. However, until April 15, you can order the 1040Works Tax Planner for $24.95 plus $3.50 s/h or $19.95 including shipping if ordered with 1040Works. (Requires AppleWorks 2.1 or later and a 130K AppleWorks desktop.)

— **NAUG** Policy: Satisfaction guaranteed or your money back. —

What Users Say about 1040Works

"1040Works is so clear and easy to use that I have cancelled my appointment with my accountant."

"1040Works made the chore of doing taxes a lot of fun and turned the grimness into playtime. You did a great job and I thank you again."

"I found the templates fun to use; this was my first attempt doing my taxes on a computer."

"I want to compliment you on the completeness of the templates and ease of use. I learned how to use some of the features of AppleWorks that I had not used before."

"I learned a number of techniques and tips I can use in my own spreadsheets. For just these alone, the price was well worth it."

"A first-class program offering excellent value for the money."

"Yours is an example of good software at a fair price. I am recommending it to my colleagues and customers."

Please send me:

_____ copies of 1040Works @ $29.95 $ _____

_____ Tax Planner @ $24.95 $ _____

_____ Tax Planner Special* @ $19.95 $ _____

Shipping $ 3.50

Total $ _____

☐ 3.5" Disks ☐ 5.25" Disks

☐ Check ☐ Visa/MC ☐ P.O. # _____

Credit Card # Expiration Date

Signature Phone #

*Must be ordered with 1040Works.

Name (Please print) NAUG ID#

Address

City, State, Zip

Mail to: **National AppleWorks Users Group**
Box 87453, Canton, Michigan 48187
(313) 454-1115; Fax: (313) 454-1965

Prices are in U.S. dollars. Payment must accompany all purchase orders. Foreign orders by credit card only; shipping is additional, specify air mail or surface delivery.

Memory for Your Apple II

Special Discount Prices!

Now you can add a megabyte of memory to your Apple II for as little as $60. These high-quality memory cards, manufactured in the USA by Sequential Systems, come with a two year replacement guarantee and free 800-number technical support from the manufacturer.

Built to industry standards, these easy-to-install memory expansions are automatically recognized by AppleWorks 2.1, 3.0, and 4.0, AppleWorks GS, Publish It!, and most other applications. Just insert the card and enjoy all the benefits that come from having the extra memory in your system.

Order your additional memory now. As with all products you buy from **NAUG**, we guarantee your complete satisfaction.

Apple IIe: Sequential System's MEG-80z card adds 1 megabyte of memory to your Apple IIe. Replaces the 80 column card in your computer. List: $99.95. **NAUG** special: $59.95.

Apple IIc: Sequential's RAM IIc adds 1 megabyte of memory to all Apple IIc and IIc+ computers built since 1985. Includes step-by-step installation instructions. (Call the **NAUG** office to learn if these cards will work with your IIc.) List: $199. **NAUG** special: $109.95.

Apple IIGS: The RAM-GS is Sequential System's high quality, multi-layer, DMA-compatible expansion card that adds 4 megabytes of memory to your Apple IIGS. List: $249. **NAUG** special: $129.95.

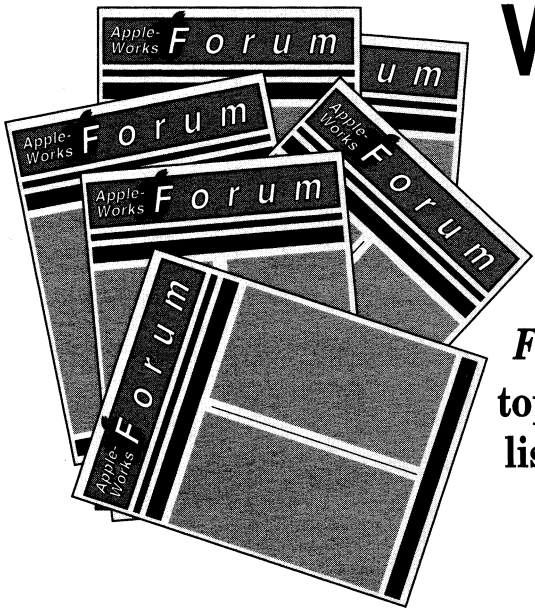

Want help finding the articles you need?

NAUG's Electronic Index Disk helps you find every article ever printed in the *AppleWorks Forum*. ♦ You can search for a title, an author, or topic. ♦ Quickly find the article you need. ♦ Get a list of every article that mentions your printer or software add-on. ♦ You'll want to keep this disk available every time you use AppleWorks.

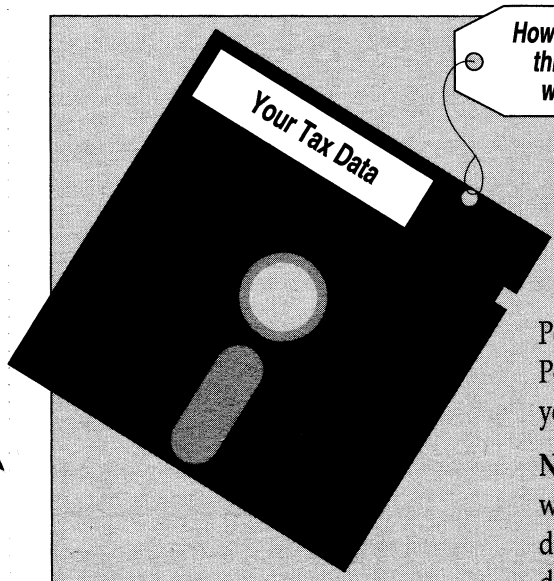

Insure Your Tax Data

This disk costs less than $1.00. But how much time and effort would it take to reconstruct your tax data? The data could be lost in an instant due to spills, dust, hardware problems, or static electricity. Can you afford to keep such valuable information on a disk that isn't insured against data loss?

Polaroid DataRescue disks are insured. If your disk gets damaged for any reason, Polaroid will try to recover the data and return it to you on a new disk. Don't trust your data to anything less.

NAUG uses DataRescue disks for its important data and hard disk backups, and we recommend these disks to our members. A box of ten 5.25-inch double-sided, double-density disks costs $9.00 (list $17.50), and a box of ten 3.5-inch double-sided, double-density disks costs $13.50 (list $28.50).

*— **NAUG** policy: Satisfaction guaranteed or your money back. —*

Memory Card Discounts:

____ Apple IIe memory @ $59.95 $_____

____ Apple IIc memory @ $109.95 $_____

____ Apple IIGS memory @ $129.95 $_____

Shipping* $ _____

Total $ _____

☐ Check ☐ Visa/MC ☐ P.O. # _____

U.S. shipping: $5 for first item, $3 each additional item. Maximum $14.

Credit Card # Exp. Date

Signature Phone

Name (please print)

Address (no P.O. boxes)

City, State, Zip

Mail or fax to: NAUG • Box 87453 • Canton, MI 48187 • (313) 454-1115 • Fax: (313) 454-1965

The Electronic Index Disk

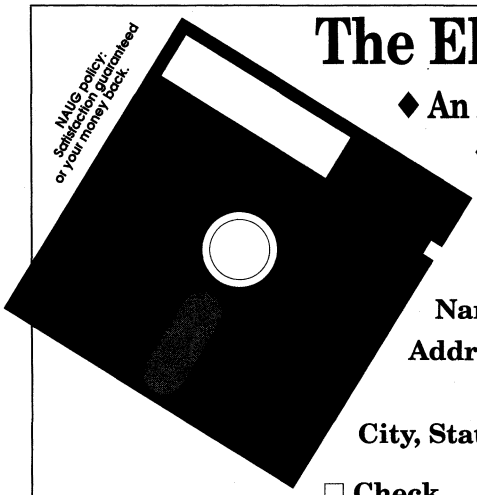

- ♦ An AppleWorks data base that's easy to use and update.
- ♦ Takes five seconds to search more than 1,500 articles.
- ♦ A useful tool to help you find information you need.
- ♦ $10 plus $2 shipping per order.

Name _____

Address _____

_____

City, State, Zip _____

☐ **Check** ☐ **Visa/MC** ☐ **P.O. #** _____ **Disk Size:** ☐ **3.5"** ☐ **5.25"**

Phone _____ **Card #** _____

Exp. Date _____ **Signature** _____

Send to:
National AppleWorks Users Group
Box 87453, Canton, MI 48187 • (313) 454-1115

***Orders outside North America require an additional $2 shipping.**

Polaroid DataRescue Disks:

____ boxes of 5.25-inch disks @ $9.00 $ _____

____ boxes of 3.5-inch disks @ $13.50 $ _____

Shipping $ _____

($3.50 for first box, $2 each additional, $8 maximum)

Total $ _____

☐ Check ☐ Visa/MC ☐ P.O. # _____

Credit Card # Exp. Date

Signature Phone #

Mail to: National AppleWorks Users Group
Box 87453; Canton, Michigan 48187
(313) 454-1115; Fax: (313) 454-1965

Name (Please print.)

Address (No postal boxes, please.)

City, State, Zip

Foreign orders by credit card only. Foreign postage additional; please specify air or surface. Payment must accompany purchase orders.

An Overview

Figure 2 presents a "map" of the completed template. We will describe the contents of each appropriate cell or block in more detail as you create the template. For now, consider the template as a four-sector spreadsheet comprising areas A, B, C, and D.

Section A (cells B1 through G68) is a monthly calendar that you can view or print. You will not enter or edit any information in this portion of the template. Instead, the @LOOKUP function in the formulas in columns E and G "extracts" the information from section B of the template.

Section B (cells I3 through N738) is a yearly calendar that also serves as your data entry area. You type notes about holidays and special days next to the appropriate dates in the left half of this data entry area. You enter your appointments in the right half of the area. The names of the months appear at intervals in column K; numbers representing dates appear in column L. All you do is scroll through the calendar and enter the events you want to record.

You can enter up to four events for each day; two entries under "Holidays & Special Days" and two under "Appointments". If your anniversary falls on March 17, you move the cursor to one of the two cells reserved for March 17th in column J, the "Holidays & Special Days" area, and type "Anniversary". You could use the second "Holidays & Special Days" cell to enter "St. Patrick's Day" and the two "Appointments" cells to enter "1 pm PARADE" and "3 pm PARTY". Because the worksheet reserves two "lines" for each of the 366 days in the longest possible year (a leap year), section B extends all the way from row 6 to row 738.

Section C (cells P1 through AE57) includes several lookup tables and calendar-calculating formulas. The template uses the lookup tables to create the yearly and monthly calendars in sections A and B by associating numbers with the days of the week and the months of the year. For example, Monday is day 2; September is month 9. Calendar formulas in section C determine which day the first day of the year falls on (based upon a 28-year calendar cycle) and whether the selected year is a leap year (based on a four-year calendar cycle). For instance, when you command the template to display February 1996 (a leap year), the monthly calendar in section A displays 29 days and not 28.

Figure 3: Column Widths

Column	Width	Column	Width
A	2	H	1
B	10	I	4
C	4	J	26
D	3	K	9 (default)
E	26	L, M	4
F	3	N	26
G	26		

Section D (cells C75 through C136) also helps to configure the month you view in section A by referencing appropriate event "lines" in the yearly calendar in section B.

Creating the Template

The template will run on any 128K Apple II. Experienced users whose systems have more memory do not have to perform all of the memory-saving steps. However, everyone should start by formatting the columns of the personal organizer. Follow these steps:

1. Add a new spreadsheet called EVENTS to the desktop. Save the template frequently as you work.
2. Use Apple-V to set recalculation "Frequency" to "Manual".
3. Use Apple-L to set the column widths shown in *Figure 3*.

Next you will create a lookup table in section C that converts the numbers 1 to 12 to the names of the twelve months. Continue as follows:

4. Type the number "1" in cell R4 and the numbers "2" through "12" in cells R5 through R15.
5. Type "JANUARY" in cell S4 and the names of the remaining months in the correct sequence in cells S5 through S15.

Now you will create a lookup table for the events that you will enter when you use the template as a personal organizer. Events include birthdays, anniversaries, and appointments. When the tem-

plate is complete and you view or print section A as a calendar for a chosen month, the spreadsheet will look up the events you entered for the month based upon the number that corresponds to that month. January is month 1, February is month 2, and so on. The numbers in step #7 below are the row locations for data entry for the beginning of each month from January through December in the completed template. These numbers tell the spreadsheet where to look for April appointments or August birthdays, for example.

6. Type the number "1" in cell R17 and numbers "2" through "12" in cells R18 through R28.

7. Type the number "1" in cell S17. Then type the following numbers in cells S18 through S28 respectively: 63, 121, 183, 243, 305, 365, 427, 489, 549, 611, and 671. When you complete this template, rows 63-120 will contain the data for February, rows 121-182 for March, and so on.

Next you will create a lookup table that converts numbers to the days of the week. Continue as follows:

8. Type the number "1" in cell P4.

9. Type the formula `1+P4` in cell P5.

10. Use the Copy Command to copy cell P5 "Within worksheet" into cells P6 through P45. Make the reference "Relative". Then press Apple-K to recalculate the worksheet. The numbers 1 through 42 should appear in these cells.

How to Save Memory

Formulas require more AppleWorks desktop memory than numbers and labels. If you have limited desktop memory, complete step #11, which converts these formulas into values. Otherwise, continue with step #12.

11. Use the Copy Command to copy "To clipboard" the "Block" of cells from P4 through P45. Move the cursor back to cell P4 and copy the contents "From clipboard", selecting "Values only". See the sidebar entitled "Quick Data Entry through Formulas" for more information about this procedure.

12. Type "Sunday" in cell Q4. Then enter the remaining days of the week in the correct sequence in cells Q5 through Q10.

Now you will copy the names of the days of the week into the remaining cells in column Q. Continue as follows:

13. Copy "To clipboard" the "Block" of cells from cell Q4 through Q10. Then put the cursor in cell Q11 and copy "From clipboard".

14. Put the cursor in each of the following cells and copy "From clipboard": Q18, Q25, Q32, and Q39. That enters six weeks of days. Q45 should contain "Saturday" when you are finished. To create a calendar in which the first day of a month could potentially fall on a Saturday (Day 7) would require a 37-day lookup table. Since you are entering whole weeks at a time, six weeks are necessary to accommodate 37 days.

Lookup Tables for the 28 Year Cycle

Now you will create a lookup table in columns R and S. As we mentioned, the calendar "cycle" is 28 years long. (For example, the calendar for 1901 is the same as that for 1929, 1957, 1985, 2013, and so forth.) In the calendar formulas we use, 1993 is year zero. When you select a given year, the lookup table determines the day of the week on which the first day of that year falls. Follow these steps:

15. Copy the contents of cells P4 through P30 "Within worksheet". When asked to indicate the destination, put the cursor in cell R31 and press the Return Key.

16. Complete this column of the lookup table by typing a zero in cell R30.

17. Enter the following numbers in cells S30 through S57: 6, 7, 1, 2, 4, 5, 6, 7, 2, 3, 4, 5, 7, 1, 2, 3, 5, 6, 7, 1, 3, 4, 5, 6, 1, 2, 3, 4. These numbers represent the day of the week (with Sunday equal to 1) on which January 1st falls during the 28 years in each calendar cycle beginning with 1993. As indicated earlier, we arbitrarily used January 1, 1993, as the starting point.

Next you will begin constructing the yearly calendar in section B of *Figure 2*. Continue with these steps:

18. Type the number "1" in cell L7. Then type the numbers "2" through "31" in cells L9 through L67 in alternate rows. That is, type the number "2" in cell L9 and skip every other row as you enter the numbers. The number "31" should be in cell L67 as the last entry. Using alternate rows reserves two "lines" for each day of the month. Remember that the template accepts two holidays (or special days) and two appointments for each day of the month.

19. Copy "To clipboard" the "Block" of cells from L7 through L67.

20. Put the cursor in cell L69 and copy "From clipboard". Then copy "From clipboard" into cells L127, L189, L249, L311, L371, L433, L495, L555, L617, and L677. You just entered the correct number of days for each of the twelve months of the year. Each day spans two rows to allow room for two appointments.

21. Copy "Within worksheet" cells L7 through L61 into cells C7 through C61. This step enters the dates for the first 28 days of any month into the monthly calendar in section A of *Figure 2*.

Memory Intensive Steps

The EVENTS template started as a 200K spreadsheet. But because we wanted to create a template that would run on any 128K system, we used a number of tricks to conserve memory. The most useful was copying formula-containing cells to the clipboard and copying them back as "Values only". You can also recoup memory if you "flush" the clipboard by copying a blank cell to it.

At certain stages it takes less memory to copy data within the worksheet than from the clipboard. Not performing these steps will probably result in a "desktop is full" message. This is a problem because the full desktop prevents you from completing the step and irreversibly corrupts the template.

In short, you can build the EVENTS template with as little as 40K of AppleWorks desktop memory, but you must follow the steps below precisely and save your template frequently. If your Apple II has expanded memory, you can safely skip some of the memory-saving steps that follow. However, we recommend that you prepare the template as we describe it and experiment later.

Quick Data Entry through Formulas

The EVENTS spreadsheet contains 738 rows in 31 columns, or some 23,000 cells in all. Setting up the template cell by cell would be a long, tedious process. To simplify the process we used cell references and formulas for quicker data entry. For example, column P contains the range of numbers from 1 to 42. These values could be entered one at a time, but it is much easier to enter "1" in cell P4, `1+P4` in cell P5, and then copy "Relative" values to cells P6 through P45.

Unfortunately, this approach adds dramatically to the amount of memory used by the spreadsheet because formulas require more memory than values. In fact, if you retain all the formulas, the EVENTS spreadsheet requires about 200K of desktop memory. We reduced that memory requirement by copying formulas to the clipboard and then back into the cells as "Values only". With the worksheet-building formulas deleted from the spreadsheet, the finished template requires only 37K on a 128K system.

First you will enter the name of each month in column K next to the days of the year that you entered in column L in steps 18 to 21 above. Continue as follows:

1. Copy "To clipboard" the "Block" of cells from cell S4 through S15.

2. Copy "From clipboard" into cells S65, S122, S183, S242, S303, S362, S423, S484, S543, S604, and S663. This copies the names of the months into column S. At this point the months of the year will be scattered through column S, but do not be concerned. The entries in column S are temporary reference points you will use to automate the entry of month names in column K. Once you complete column K, you will delete the block of cells in column S because you no longer need these references.

3. Type `(S4)` in cells K7, K15, K23, K31, K39, K47, K55, and K63. This puts the word JANUARY every eight rows in the "January" range of dates. Displaying the name of each month

several times throughout that part of the yearly calendar will make it easier to enter events later on as you scroll through the data entry portion of the calendar.

4. Copy cells K7 through K63 "Within worksheet" into cell K69. Make all cell references "Relative".
5. Similarly, copy cells K7 through K63 "Within worksheet" into cells K127, K189, K249, K311, K371, K433, K495, K555, K617, and K677. Make all cell references "Relative". Then press Apple-K to recalculate. The names of the twelve months of the year will appear next to their respective dates in the calendar. Copying the cells "Relative" changes the cell reference from cell S4 to cell S66, S124, S186, S246, S308, S368, S430, S492, S552, S614, and S674, respectively. That sequence matches the cell reference with the name of the appropriate month.
6. Put the cursor in cell K1 (or any other blank cell) and copy the cell "To clipboard" as a "Block". That "flushes" the clipboard and recaptures about 3K of memory on a 128K system.
7. Copy "To clipboard" the "Block" of cells from cell K7 through K737. Put the cursor in cell K7 and copy "From clipboard". At the prompt, choose "Values only".
8. Use Apple-B to blank the "Block" of cells from cell S58 through S737.
9. Repeat step #6 to clear the clipboard.
10. Save the template, remove the template from the desktop, and then load it back onto the desktop from your disk. That releases additional memory.

Numbering the Data Entry Cells

Now you will number a series of data entry cells for all the days of the year. You must number these cells correctly so the monthly calendar in section A displays the appropriate events when you work with your personal organizer. Continue as follows:

11. Type the number "1" in cell I7.
12. Type `1+I7` in cell I8.
13. Copy "Within worksheet" the formula in cell I8 into cells I9 through I277. Choose "Relative" at the prompt. Then use Apple-K to recalculate the spreadsheet.

Now you will convert these formula-generated values to numbers to save desktop memory. Continue as follows:

14. Copy "To clipboard" the "Block" of cells from I7 through I276 (but not I277). Put the cursor in cell I7 and copy "From clipboard". Choose "Values only" at the prompt.
15. Copy cell I277 "Within worksheet" to cells I278 to I553. (Press Apple-7 to navigate to cell I553.) Choose "Relative" at the prompt. Press Apple-K to recalculate the spreadsheet.
16. Convert the formulas to values by copying "To clipboard" the "Block" of cells from I277 to I552. Move the cursor to cell I277 and copy "From clipboard", selecting "Values only" at the prompt.
17. Clear the clipboard contents from memory by copying cell I554 "To clipboard" as a "Block".
18. Copy cell I553 "Within worksheet" into cells I554 through I738. Choose "Relative" at the prompt. Press Apple-K to recalculate the spreadsheet. Column I will now contain a series of cells numbered 1 through 732, or two cells for each of the 366 days in the longest possible year, which is a leap year. As you recall, the yearly calendar (section B) accommodates two holidays (or special days) and two appointments. Hence, two "lines" per date.
19. Copy an empty cell "To clipboard" as a "Block" as described in step #6. Save, remove, and reload the template as described in step #10.
20. Copy "To clipboard" the "Block" of cells from I553 to I738. Move the cursor to cell I553 and copy "From clipboard", selecting "Values only" at the prompt.
21. Once again, save, remove, and reload your template.
22. Copy "Within worksheet" cells I7 through I738 into cell M7. Be patient while AppleWorks copies the contents of all 732 cells. The values in column M ensure that the monthly calendar in section A will list the appropriate "Appoint-

ments" for any given month, just as the values in column I ensure that the calendar will list appropriate "Holidays & Special Days".

23. Save, remove, and reload your template.

Now you will enter the labels, equal signs that set the labels off from the data in the columns, and the vertical lines that separate the columns. Continue as follows:

24. Type the labels shown in *Figure 4*.

25. Copy "To clipboard" cell C6 as a "Block". Then copy "From clipboard" into cells E6, G6, J6, and N6. That enters equal signs to "underline" the 26-character wide columns.

Although cell C6 appears to contain only four equal signs, the cell indicator near the bottom of the screen displays "Repeated -=". When the repeated equal sign is copied to a column whose width is 26 characters, it repeats across the entire width of the column.

26. Copy cell D5 "Within worksheet" to cells D6 through D68.

27. Copy cell F5 "Within worksheet" to cells F7 through F68. The column F dividers will not line up properly; you will fix that problem shortly. Save, remove, and reload your template.

Figure 4: Labels to Enter

Cell	Keyboard Entry
B1	MONTH
B2	YEAR
D1	<-- (Use the "less than" sign and hyphens to produce these
D2	<-- arrows. Press Shift-" before entering non-text labels.)
E1	Enter the month as a number from 1 to 12.
E2	Enter the year as a four-digit number.
J3	DATA ENTRY
N3	DATA ENTRY
F4	, (comma)
B5	Day
C5	Date
D5	|
E5	Holidays & Special Days
F5	|
G5	Appointments
J5	Holidays & Special Days
N5	Appointments
B6	========= (9 equal signs)
C6	==== (4 equal signs)
F6	=|=

Entering Calendar Formulas

Next you will enter the formulas that calculate the days and dates (see section C of *Figure 2*). Follow these steps to enter the appropriate formulas:

1. Enter the numbers "1" through "12" in cells T5 through AE5. These numbers represent the twelve months of the year. This is part of a lookup table which determines the first day of each month in the year you choose.

2. Type (C2) in cell E4. Nothing appears in cell E4 for now. In the completed template, cell E4 will display the year you enter in cell C2. Cells E4, F4, and G4 comprise the title of the monthly calendar in section A. For instance, the title will read "1994, January" or "1996, June" or whatever month and year you designate in cells C1 and C2, respectively.

3. Type (S1) in cell T6. This cell will remain blank until you complete step #9 below.

4. Enter the values and formulas listed in *Figure 5* into cells G4 and cells U4 through AE4.

The formula in cell G4 checks cell C1 to determine the name of the month you designate in section A of the template. Cell T6 takes the day found in cell S1 for January 1 of the given year. Then the cells from U4 to AE4 add the appropriate number of days to the previous month to determine the first day of the month you want to display in section A. The formula in cell V4 checks if the chosen year is a leap year; that is, if it is divisible by four.

5. Enter the formula from *Figure 5* into cell U6. Then copy the formula in cell U6 "Within worksheet" into cells V6 through AE6, choosing "Relative" for all four variables. The cells will display the number "3" for now.

Cells U6 through AE6 take the numbers obtained from cells U4 through AE4 and, if they are greater than 7, convert them to a number from 1 to 7 (which matches the day of the week). Cells T5

Figure 5: Values and Formulas (in order of entry)

Cell	Keyboard Entry
G4	@LOOKUP(C1,R4...R15)
U4	3+T6
V4	@IF(@INT(C2/4)=(C2/4),1+U6,U6)
W4	3+V6
X4	2+W6
Y4	3+X6
Z4	2+Y6
AA4	3+Z6
AB4	3+AA6
AC4	2+AB6
AD4	3+AC6
AE4	2+AD6
U6	@IF(U4<8,U4,@IF(U4=8,1,@IF(U4=9,2,3)))
B7	@LOOKUP(AE10,P4...P45)
B9	@LOOKUP(AE10+C7,P4...P45)
B62	@IF(@OR((@AND(C1=2,@INT(C2/4)=(C2/4))),C1<>2)," ","")
B63	@IF(@ISBLANK(B62),"",@LOOKUP(AE10+C61,P4...P45))
B64	@IF(C64>0,@LOOKUP(AE10+C62,P4...P45),"")
B65	@IF(C1<>2,@LOOKUP(AE10+C63,P4...P45),"")
B66	@IF(@OR(C1=1,C1=3,C1=5,C1=7,C1=8,C1=10,C1=12)," ","")
B67	@IF(@ISBLANK(B66),"",@LOOKUP(AE10+C65,P4...P45))
C63	@IF(@ISBLANK(B62),"",29)
C65	@IF(C1<>2,30,"")
C67	@IF(@ISBLANK(B66),"",31)
R1	(((C2)-1993)/28)-(@INT(((C2)-1993)/28))
S1	@LOOKUP((@IF(R1<0,1+R1,R1))*28.001,R30...R57)
AE10	@LOOKUP(C1,T5...AE5)
C75	@LOOKUP(C1,R17...R28)
E7	@LOOKUP(C75,I7...I738)
G7	@LOOKUP(C75,M7...M738)
E63	@IF(@ISBLANK(B62),"",@LOOKUP(C131,I7...I738))
E64	@IF(@ISBLANK(B62),"",@LOOKUP(C132,I7...I738))
E65	@IF(C1<>2,@LOOKUP(C133,I7...I738),"")
E66	@IF(C1<>2,@LOOKUP(C134,I7...I738),"")
E67	@IF(@ISBLANK(B66),"",@LOOKUP(C135,I7...I738))
E68	@IF(@ISBLANK(B66),"",@LOOKUP(C136,I7...I738))
G63	@IF(@ISBLANK(B62),"",@LOOKUP(C131,M7...M738))
G64	@IF(@ISBLANK(B62),"",@LOOKUP(C132,M7...M738))
G65	@IF(C1<>2,@LOOKUP(C133,M7...M738),"")
G66	@IF(C1<>2,@LOOKUP(C134,M7...M738),"")
G67	@IF(@ISBLANK(B66),"",@LOOKUP(C135,M7...M738))
G68	@IF(@ISBLANK(B66),"",@LOOKUP(C136,M7...M738))

through AE5 and T6 through AE6 serve as a lookup table for the number of the day of the week for the first day of each month. The table is arranged horizontally so that calculations proceed sequentially from cell T6 to cell U4 to U6 to V4 to V6 and so on. The result goes into cell AE10, which is the last cell calculated in the spreadsheet.

6. Enter the formulas for cells B7 and B9 from *Figure 5*. AppleWorks will display "NA" in cell B7 and "SUNDAY" in cell B9.
7. Copy the formula in cell B9 "Within worksheet" into cells B11 through B61. Choose "No change", "Relative", "No change", and "No change" in response to the prompts. AppleWorks will display "Sunday" in these cells.
8. Use Apple-B to blank all the even numbered cells beginning with cell B12 and ending with cell B60. There is no need to display the weekday names twice.
9. Enter the formulas for cells B62 through B67 and cells C63, C65, C67, R1, S1, and AE10 from *Figure 5*. Save, remove, and reload the template.

The lookup formulas in cells B7 through B67 use cell AE10 to determine the correct day. The days of the week in column B will be correct after you complete the template, designate a month, and recalculate the worksheet.

The formulas in C63, C65, and C67 determine the correct number of days for the month you view in section A. In a leap year, February has 29 days (cell C63). In any year, months other than February have either 30 days (cell C65) or 31 days (cell C67).

To work properly, the template must identify the year within the 28 year cycle you chose. The formulas in cells R1 and S1 perform these computations. The formula in cell R1 subtracts 1993 from the year you specified in cell C2. Then the formula calculates a remainder. The formula in cell S1 multiplies the remainder by 28 to determine the year you chose in the cycle. That formula then uses the lookup table in cells R30 through R57 to find the day

that January 1 falls on in the selected year (in 1993, it was a Friday). A "fudge" factor of 28.001 in the formula offsets any rounding errors that may occur in cell R1.

Entering the Event Formulas

Now you will follow these steps to prepare section D. These formulas ensure that any events which you enter in columns J and N of section B appear on the correct lines in section A, columns E and G:

1. Type the formula in *Figure 5* for cell C75.
2. Type `1+C75` in C76.
3. Copy "Within worksheet" the formula in cell C76 into cells C77 through C136. Choose "Relative" at the prompt. The range will fill with "NA" messages for now. The formulas in cells C75 through C136 reference the lookup table in column R to determine which spreadsheet cells in the data entry area (section B) are allocated to the designated month appearing in section A.
4. Enter the formulas listed in *Figure 5* for cells E7 and G7. These formulas look up "lines" in columns I and M, which point to events you entered for the chosen month.
5. Copy the formula "Within worksheet" from cell E7 into cells E8 through E62. Choose "Relative" for the first variable and "No change" for each of the other two variables. AppleWorks will display "NA" in these cells for now. Later, AppleWorks will fill in the "Holidays & Special Days" for the month you want to view.
6. Copy "Within worksheet" the formula from cell G7 into cells G8 through G62. Choose "Relative" for the first variable and "No change" for the other variables. AppleWorks will display "NA" in these cells for now. Later AppleWorks will fill in your "Appointments" for the month you want to view.
7. Enter the formulas listed in *Figure 5* into cells E63 through E68 and G63 through G68. These formulas look up events for the 29th, 30th, and 31st day of the month you want to view.
8. Save, remove, and reload the template.
9. Enter the current month as a number from 1 to 12 in cell C1. Enter the year in cell C2. Use the format "19XX".
10. Press Apple-K twice to recalculate the spreadsheet. There will be a lengthy delay each time the spreadsheet calculates columns E and G.
11. Save, remove, and reload the template.

Formatting the Worksheet

Now, you will format the cells in your template. Follow these steps:

1. Use Apple-L to format cells B5 through N5 as a "Block" and change the "Label format" to "Center". Also center cells J3 and N3 and the following two blocks of cells: D6 through D68 and F7 through F68.
2. Use the Apple-L command to format columns I, L, M, P, and R as "Value format" with "Commas" and zero decimal places. Comma format reserves a space to the right of each value, which creates a more pleasing appearance.
3. Save, remove, and reload the template.

Protect Your Work

Generally, we protect our templates completely as one large block and then lower the level of protection for the cells that require data input. But protecting this large template as a block requires an inordinate amount of memory and exceeds the capacity of most AppleWorks desktops. Instead, you can protect the worksheet as "Columns". That protects only the non-blank cells and uses significantly less memory. Moreover, the blank data entry cells in columns J and N remain unprotected. Follow the steps below to protect the worksheet:

1. Put the cursor in cell A1 and then use Apple-L to protect "Columns" A through AE. Allow "Nothing".
2. Allow "Values only" in the "Block" of cells from C1 to C2.
3. Save, remove, and reload your template.

Using the Template

Setting up this template is a challenge because of the size, complexity, and memory requirements of

the worksheet. But using the template is easy. Follow these steps:

1. With the cursor in cell A1, press Apple-Right Arrow twice. You will see dates lined up in the center of the screen. Use the Arrow Keys to switch between the "Holidays & Special Days" and "Appointments" data entry areas. Use Apple-2 through Apple-9 to move in approximately six-week intervals from January through December.

2. Type information about birthdays, fixed holidays, appointments, and so on for the appropriate dates. You can enter as many events as your desktop memory allows, but no more than two appointments and two holidays or "special days" per date.

   Save the events such as birthdays and holidays which occur annually as part of the EVENTS template. Appointments and other non-recurring events can be blanked out or overwritten as you proceed from one year to the next.

   Although the numbers in columns I and M may seem distracting, these line numbers are essential and cannot be blanked. AppleWorks uses these numbers to find events and display them properly in section A, the monthly calendar.

3. After you type several events, put the cursor in cell C1 and enter a number from 1 to 12 to signify the month you want to view.

4. Put the cursor in cell C2 and enter the year. Use the format "19XX" or "20XX".

5. Press Apple-K twice to recalculate the spreadsheet. Be patient. AppleWorks will look up the events you typed for the month in question and display that data in columns E and G. Then the template calculates the correct calendar for the month and displays that information in columns B and C.

Printing Monthly Organizers

The template's layout lets you preview each month's special days and appointments on the screen. You can also print each monthly organizer on a single piece of paper by specifying the block from B4 through G68. Because the template uses 65 of the 66 lines available on a piece of 8.5-inch by 11-inch paper, you must insert the paper so the printing begins near the top edge of the page. For more compact printouts, set the type size to 17 characters per inch and the lines-per-inch setting to "8". You can store your calendars in a binder, post them on a bulletin board or refrigerator door, or cut and paste them manually into a school or club newsletter.

Conclusion

This month's template is a personal organizer that tracks special days such as birthdays and anniversaries and accommodates up to two appointments per day. With some modifications, you can use the template to produce club or school calendars that list special events. You can print each monthly calendar on a single piece of paper for "take with" convenience. We drew inspiration for this month's template from a lesson plan organizer that you will create next month.

*[Mitchell Bernstein teaches mathematics at the Philadelphia High School for Girls. He is co-author of **Algebra I: An Integrated Approach**, published by AMSCO.]*

*[Dr. Cynthia E. Field has been writing about computers and designing templates since 1982. She is Contributing Editor for the **AppleWorks Forum**.]*

*[Ed: A working copy of this template appears on this month's **NAUG on Disk**, which costs $10 from **NAUG**. **NAUG on Disk** requires a 3.5-inch disk drive; the template requires AppleWorks 3.0 or later and an Apple II with at least 128K of RAM.]*

Corrections

Please make the following corrections to your copy of the ***AppleWorks Forum***:

December 1993, page 23, sidebar "How to Upload Formatted Text Files to GEnie", step #3: Change *SEND to *UPLOAD.

Happy New Year

— From the editors and staff at the National AppleWorks Users Group

What Advanced Users Should Know about AppleWorks 4

by Randy Brandt

Although many advanced AppleWorks users immediately switched to AppleWorks 4, others have concerns about making the switch. In this article, AppleWorks 4 developer Randy Brandt provides the information advanced users want when they upgrade to the newest version of AppleWorks.

Over the years, AppleWorks enthusiasts became so accustomed to the abundance of third-party enhancements that they sometimes forgot which features were built into the program and which were add-ons. That can lead to concerns about upgrading to AppleWorks 4.

This article describes the status of the different enhancements available for AppleWorks 4. This information should make it easier for power users to upgrade to the newest version of AppleWorks.

TimeOut

Of course, the TimeOut series is the most significant of the AppleWorks add-ons. The dozens of new features built into AppleWorks 4 renders many of these enhancements obsolete. For example, AppleWorks 4 includes a suite of disk utilities and the capability to manage three concurrent desktops. This provides many of features that once required TimeOut FileMaster and Triple Desktop.

Alan Bird let us incorporate his TimeOut engine and TimeOut Utilities in AppleWorks 4, so all AppleWorks users now can use this powerful technology. AppleWorks 4 also includes Mark Simonsen's TimeOut Paint application, a double high resolution drawing program formerly available only with TimeOut SuperFonts and TimeOut Graph. TimeOut Paint lets you load, view, edit, and save double hi-res pictures, including the ones packaged with the AfterWork screen blanking module described in the "New for AppleWorks 4" sidebar later in this article.

Figure 1 lists the status of the dozens of existing TimeOut applications. Some work "as is", while others require conversion with the TimeOut Updater, a utility that comes with AppleWorks 4. *Figure 1* also lists TimeOut add-ons that we expect to be converted by their developers and add-ons that are now obsolete.

> ***"Here's what advanced users should know about switching to AppleWorks 4."***

In addition, the release of AppleWorks 4 should spark renewed interest in the development of TimeOut enhancements for the program. For example, Quality Computers recently announced the release of TimeOut ShrinkIt Plus, a $29.95 file compression utility that works within AppleWorks.

Patches

Many power-user modifications are made by patching AppleWorks. SuperPatch and Companion Plus, two popular patch programs for AppleWorks 3.0, automated the patching process and let users customize their commands and screens.

John Link, the developer of SuperPatch, recently released lastPATCH, which includes 18 patches for AppleWorks 4. lastPATCH is freeware that you can order from the **NAUG** Public Domain Library ($4

Figure 1: Status of Existing TimeOut Applications

TO Application	Works "As Is"	Works with TO Updater	Needs Conversion	Obsolete
Analyst (wp)			*	
Analyzer (ss)			*	
Area Codes			*	
ASCII Values	*			
AWP to TXT				*
BasicCat	*			
Bell Changer				*
Block Copy (ss)			*	
Calculator		*		
Calculator+			*	
Category Search				*
CelLink				*
Clipboard Viewer				*
Clock				*
Copy Block			*	
CR Stripper			*	
Data Converter				*
Desktop Sorter	*			
DHGRViewer	*			
Directory Manager				*
DirecTree			*	
Disk Test				*
Easy Launch				*
Envelope Addresser	*			
File Librarian			*	
FileMaster				*
FormulaToValue				*
Glossary			*	
Grammar		*		
Graph		*		
Help Screens			*	
Help Screens screens	*			
Indexer			*	
Line Sorter			*	
Mark Merge				*
Measurements		*		
Menu Maker				*
MultiPrint			*	
Notepad	*			
Page Preview		*		
PathMaster				*
Pathologist				*

TO Application	Works "As Is"	Works with TO Updater	Needs Conversion	Obsolete
PickFonts			*	
Printer Manager	*			
Print60				*
Program Selector			*	
Publisher Menu				*
Puzzle	*			
QuickColumns				*
QuickSpell				*
QuickStyles			*	
QuickTabs			*	
ReportWriter			*	
Rows <—> Cols			*	
Screen Out				*
Screen Printer	*			
SideSpread		*		
Stop Watches			*	
SuperFiller			*	
SuperFind			*	
SuperFonts		*		
SuperForms		*		
Table of Contents			*	
Task Launcher				*
TeleComm			*	
TextLoader+				*
Thesaurus		*		
Triple Clipboard				*
Triple Desktop				*
Ultra Compiler		*		
UltraLock			*	
Ultra Options		*		
Ultra Mac2Menu		*		
UM Tokens				*
Vital Stats				*
Word Count			*	

Note: I'm not sure what will happen with the following applications. In some cases, I haven't tracked down the programmers; in others, I'm not sure of the applications' continuing usefulness: Calendar, Case Converter, CellMover, Dialer, File Encryptor, File Search, File Status, and FileLister.

New for AppleWorks 4

AppleWorks 4 includes a built-in screen saver that blanks the screen when you leave your computer unattended. Directions for turning on this feature appear in Appendix B in the *AppleWorks 4 Reference Manual*.

AppleWorks 4 users who want a more entertaining way to protect their system should consider AfterWork, a collection of screen savers developed by Randy Brandt and Matt Reimer for Quality Computers.

AfterWork offers more than a dozen displays including a Pac Man character that "eats" your text, "melt down" that "melts" your text into a pile at the bottom of the screen, and "entropy" that blanks individual pixels until your screen is black. AfterWork costs $29.95 from Quality.

for a 5.25-inch disk, $6 for a 3.5-inch disk, plus $2 s/h *per order*) or download from the **NAUG** BBS or from the **NAUG** area on America Online.

Quality Computers plans to release a new version of Companion Plus that will include many of the patches of the older version of this product. *[Ed: At press time in mid-December, Quality has not announced a release date of the replacement for Companion Plus.]*

Macros

As you probably know, AppleWorks 4 includes an UltraMacros player that lets you run TAPL (The AppleWorks Programming Language) programs that come with AppleWorks 4 or from third-party developers. However, you need UltraMacros 4.3 if you want to convert your existing macros or write your own TAPL programs. The TimeOut Updater utility that comes with AppleWorks 4 automatically upgrades UltraMacros 4.2 to version 4.3. If you do not own UltraMacros 4.2, you can buy version 4.3 from Quality Computers.

You must recompile your macros with UltraMacros 4.3 to make them compatible with AppleWorks 4. Macro conversion is generally straight-forward, unless you used peek or poke statements that address specific memory locations. *Figure 2* lists many of those addresses so you can upgrade your macros.

A History of AW Enhancements

Most AppleWorks enhancements created in the early to mid-1980s were patches that changed program features such as the sound of the error beep.

Jeeves, which included a pop-up appointment calendar, was the first major AppleWorks add-on. Jeeves was written by the inventor of the auxiliary slot memory card, but the program never caught on (perhaps because Pinpoint Publishing soon released a full-featured appointment calendar with dialer, envelope addresser, notepad, and eventually, a spell checker). By the time MacroWorks, AutoWorks, and KeyPlayer added macro capabilities to AppleWorks, a thriving cottage industry had evolved to enhance Apple's popular integrated package.

Beagle Bros launched the TimeOut series in 1987 and soon dominated the market. The company also published several other enhancements including Companion Plus and Outliner, which were originally published by JEM Software. In the late-1980s Quality Computers offered the only other significant add-on; SuperPatch.

With Quality Computers' 1992 acquisition of the Beagle Bros Apple II product line, the stage was set for the well-known mail order merchant to take over AppleWorks from Claris Corporation (which had acquired the product from its parent company some years earlier). It is fair to say that Quality Computers has now become the last major source of non-IIGS Apple II productivity software.

An "Easter Egg"

In computer software, an "Easter Egg" is an undocumented feature or message that is triggered by a specific key combination. AppleWorks 4 contains an Easter Egg in the help screen that you access from the Main Menu. Experiment by pressing the different Apple Key combinations at different points in the help screen until you reveal the surprise.

Many Apple IIGS users include a poke in their AppleWorks 3.0 startup macro that lets the IIGS numeric keypad respond to keypad macros. This poke causes problems in AppleWorks 4 and must be removed from your macros. With AppleWorks 4 you control the keypad with the UltraMacros Options in the AppleWorks Standard Settings menu.

Conclusion

AppleWorks 4 offers significant benefits for advanced AppleWorks users. It may take time for

Figure 2: TAPL Memory Addresses*

Module(s)	Description	Memory Address AppleWorks 3.0	Memory Address AppleWorks 4	#Name	Address Type	Notes
GEN	**Active desktop**	**not used**	**$1Ø24**		**peek**	**returns 1, 2, or 3**
GEN	Available memory	$Øfd3	same	#freemem	peekword	
GEN	**Bell duration**	**$16c6**	**$1447**		**peek**	
GEN	**Bell pitch**	**$16c8**	**$1449**		**peek**	
GEN	Clipboard data type	$Øc52	same	#kbtype	peek	
GEN	**Clock on**	**$B7CB**	**$B6B7**	**#dclock**	**peek**	
GEN	Counter location	$CØ2E	same		peek	Yes. p=peek $CØ2E //single semi-random number
GEN	Current file #	$Øc54	same	#openfile	peek	
GEN	Current file type	$Øc6Ø	same		peek	Yes. 1 for adb, 2 for awp, 3 for asp
GEN	Current location	$Øe86	same		peek	Yes. p= peek $Øe86: if p = Ø: in a file
GEN	Current menu item number	$ØØ8c	same		peek	
GEN	Cursor character	$1Øf5	same	#curschar	peek	
GEN	Cursor type	$1Øf1	same	#socursor	peek	Yes. Ø for Insert, 1 for Overstrike
GEN	Cursor x position	$ØØ15	same		peek	x = peek 2Ø + 1 //get horizontal position
GEN	Cursor y position	$ØØ16	same		peek	y = peek 21 + 1 //get vertical position
GEN	Day	$AB16	same	#day	peek	
GEN	Desktop file count	$Øc55	same	#filecount	peek	
GEN	**Directory display order**	**$38a1**	**$31A2**	**#dirsort**	**peek**	**Yes. Default is $2Ø. Poke $2c for disk order**
GEN	Disable <esc> key	$11AC	same		poke	Yes. On = $1B, off =Ø
GEN	File size	$Øc6e	same		peek	
GEN	Horizontal cursor position	$ØØ82	same	#curhor	peek	
GEN	Horizontal position of msg	$FF7Ø	same	#msgh	peek	
GEN	Hour	$AB17	same	#hour	peek	
GEN	**Insert cursor character**	**$1c44**	**$ØFØD**		**peek**	**In AW4, use Ø to invert the character under the cursor**
GEN	**Keypad**	**$DØ31**	**not used**	**#keypad**	**peek**	
GEN	**Keypad macros**	**$b5Ø4**	**not used**		**poke**	**AW3: poke $b5Ø4, $39; begin: // disable keypad macros. poke $b5Ø4, $27; sa-C>! // enable keypad macros**
GEN	Length of current file name	$Øc56	same		peek	Yes. L=peek $c56: $1 = screen 7, 1, L
GEN	Lines on the clipboard	$Øc5Ø	same		peek	
GEN	Minute	$AB18	same	#minute	peek	
GEN	Month	$AB15	same	#month	peek	
GEN	**Mouse button return**	**$Ø7d5**	**not used**		**poke**	**Yes. poke $7d5,$aØ**
GEN	**Overstrike cursor character**	**not used**	**$ØFØE**		**peek**	**In AW4, use Ø to invert the character under the cursor**
GEN	Save location	$Ø3Ø5	same		poke	Yes. Poke $3Ø5,F //save value of F in empty location
GEN	Save status of file	$Øc6c	same	#filestatus	peek	Yes Ø for unchanged; 1 for new; 2,6 for changed; 4 for saved
GEN	**Time on**	**$B7C2**	**$B6AF**	**#tclock**	**peek**	
GEN	Turn cursor off	$1Øf2	same		peek	Yes. Poke Ø for off, 1 for on
GEN	Turn off yes/no	$Øf14	same		poke	Yes. p = peek $ØF14: poke $ØF14,1:
GEN	Vertical cursor position	$ØØ83	same	#curver	peek	
GEN	Vertical position of msg	$FF71	same	#msgv	peek	
GEN	Year	$AB14	same	#year	peek	

Module(s)	Description	Memory Address AppleWorks 3.0	Memory Address AppleWorks 4	#Name	Address Type	Notes
ADB	**Category total**	**$8521**	**$9221**	**#dbfields**	**peek**	
ADB	**Current record**	**$8519**	**$9219**		**peekword**	
ADB	**Database location**	**$8518**	**$9218**		**peek**	**Yes. 68 for single or multiple layout, 82 for reports**
ADB	**Database zoom status**	**$8520**	**$9220**	**#dbzoom**	**peek**	
ADB	**How many selected records**	**$3917**	**$9228**	**#dbselrecs**	**peek**	
ADB	**Number of active reports**	**$851b**	**$921b**		**peek**	
ADB	**Number of rules**	**$85dd**	**$92dd**	**#dbrules**	**peek**	
ADB	**Record total**	**$8522**	**$9222**	**#dbrecs**	**peekword**	
ADB	**Report total**	**$8524**	**$9224**	**#dbrpts**	**peek**	
ADB	**Return direction**	**$851d**	**$921d**		**peek**	
ASP	Last data row	$8Øfc	same		peekword	
ASP	Rightmost column	$8Øfe	same		peek	
ASP	Spreadsheet cell content	$829a	same	#workval	peek	Yes. If peek>127 then Formula
ASP	Spreadsheet cell information	$829Ø	same	#worktype	peek	Ø=blank, 25 and 2Ø9 = blank with protection
ASP	Spreadsheet column width	$ØØb1	same	#ccwidth	peek	
ASP	Spreadsheet label	$8Ø33	same	#workstr	peek	
ASP	Spreadsheet recalculation: A or M	$7f84	same		peek	Yes. 65 = Auto, 77 = Manual
ASP	Spreadsheet recalculation: C or R	$7f83	same		peek	Yes. 67 = by column, 82 = by row
ASP	Spreadsheet width table	$7fØ3	same	#colwidths	peek	
ASP	Spreadsheet window status	$7f88	same		peek	
ASP	Spreadsheet x position	$8ØFE	same		peek	Yes. x=peek $8ØFE
ASP	Spreadsheet y location	$8ØFC	same		peekword	Yes. y = peekword $8ØFC
ASP	Spreadsheet zoom status	$7ffØ	same	#spzoom	peek	
AWP	AWP zoom status	$7c61	same	#wpzoom	peek	
AWP	Current line information	$ØØB5	same		peek	Yes. p = peek $B5: if p > 2Ø8 then command line
AWP	Indent or left margin	$ØØb4	same		peek	
AWP	Keypress	$ØØ84	same	#key	peek	
AWP	Line length	$7BØ1	same	#wpwa	peek	Yes. If peek >128, then carriage return
AWP	Line termination	$ØØb6	same		peek	Yes. If > 128 then carriage return

*Boldface type signifies changes in AppleWorks 4.0

Status Report: Other AppleWorks Enhancements

Here are the update plans from some of the major AppleWorks enhancement developers. We encourage developers to contact **NAUG** with their plans for AppleWorks 4 so we can share this news with the user community.

ACTAsoft (AlphaCheck; Payroll Plus): Don Aquilino reports that AlphaCheck Plus, his company's Quicken-like bookkeeping application, is not compatible with AppleWorks 4. At the moment, he does not plan to upgrade this product. *[Ed: **NAUG** members who want an AppleWorks 4-compatible home accounting add-on should consider CheckWorks, which costs $29.95 from Quality Computers.]*

Payroll Plus, ACTAsoft's payroll accounting add-on, is compatible with AppleWorks 4. The 1994 version of Payroll Plus, which will be released when ACTAsoft receives new tax tables from the IRS, will work with either AppleWorks 3.0 or AppleWorks 4. *[ACTAsoft, 19700 Wells Drive, Woodland Hills, CA 91364; (818) 996-6731.]*

Magical Software (Magic File Cabinet, Magic Newsgroup Reader, Magic Newsgroup Responder): Gary Hayman reports that updated versions of all Magical Software products should be available by the time you read this. Magic File Cabinet increases the amount of information you can fit into data base fields. Magic Newsgroup Reader and Responder let you work offline during ProLine and Internet telecommunications sessions. *[Gary Hayman, 8255 Canning Terrace. Greenbelt, MD 20770; (301) 345-3230.]*

Office Productivity Software (DiskTools, About Time, AmperMacros Plus): OPS recently upgraded DiskTools, which includes TimeOut Volume Backup and TimeOut File Backup, to work with AppleWorks 4. Volume Backup creates a disk image backup of a floppy or hard disk. File Backup makes it easy to do daily backups.

About Time, OPS's time and date calculator that is accurate to the year 9999, is compatible with AppleWorks 4.

OPS does not plan to upgrade AmperMacros Plus, the company's set of UltraMacros dot commands, for AppleWorks 4. *[Office Productivity Software, Box 2132, LaGrange, GA 30241; (706) 845-7283.]*

S.A. AuTeur (EuroWorks): Frank Wells reports that EuroWorks will require extensive modification for AppleWorks 4. Wells is waiting to see whether a sufficient demand develops for foreign language output under AppleWorks 4. *[S.A. AuTeur, Box 7459, Beaverton, OR 97007; (503) 645-2306.]*

Ultimately, the most compelling enhancement to AppleWorks 4 will be AppleWorks 5. According to AppleWorks 4 creator Randy Brandt, Quality Computers plans to develop yet another version if sales of AppleWorks 4 warrant the investment. Brandt expects to release AppleWorks 5 as early as 1995 — more than a decade after AppleWorks first appeared on the computer scene. Few computer products have had such staying power or influence.

– Cynthia Field

vendors to update your favorite TimeOut enhancements or for you to convert your macros, but the time and effort are worth it. I don't want to be immodest, but I think you will find that AppleWorks 4 is the best AppleWorks yet.

[Randy Brandt, who owns JEM Software, is the project manager and co-author of AppleWorks 4. You can contact Mr. Brandt online as "BRANDT" on GEnie or as brandt@genie.geis.com via the Internet. Write to him at 7578 Lamar Court, Arvada, Colorado 80003 or fax to (303) 422-4856.]

*[An AppleWorks data base file with the memory addresses for AppleWorks 4 appears on this month's issue of **NAUG on Disk**, which requires a 3.5-inch disk drive and costs $10 from **NAUG**.]*

Laptop for Apple / Mac / IBM

Built-in software
128K, 2 lb w/case
Full size keyboard
Uses 4 -AA's or A/C
Transfer or print files

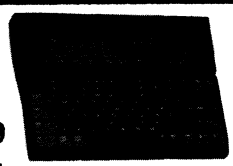

PC4 for Mac / IBM **$239**

BridgeIt installs to AppleWorks menu. Send files between PC4 and AppleWorks 3.0 or 4.0 - $35.

	Computer	w/Amber	w/Color
LASER 128	289	414	488
LASER 128EX	359	484	558

Largest LASER Repair Center & Educational Dealer

Joystick.....25
2400 Modem....79
No-slot Clock...36 IIe 128K Card...25
Hard Drive w/card - Laser 128, IIe: 20 / 40 meg....289 / 339
Mouse for: IIe w/card...89, Laser 128, IIc, IIc+, Mac+...70
Laser 5.25" Drive...99 AE 3.5" 800K Drive...199
Goldstar Composite Monitor....125 Monitor Stand....25
RGB 14" color + green + tilt & swivel for Laser.....210
Magnavox RGB/Composite Color: IIe, IIc...288 IIgs...298
IIe Printer Card w/cable: Parallel...45 Super Serial...62

Memory
256K chips...$18/set
RAM IIgs w/4 meg...139
Card w/1 meg: IIe..79 IIc..141 c+..156 Laser 128 ..101

ImageWriter I Compatible Printer...195

1-800-726-7086

Intern'l / Local Orders
(407) 790-1070
Fax 790-0108

Perfect Solutions
12657 Coral Breeze Drive
W. Palm Bch, FL 33414

New Disks in the NAUG Library

lastPATCH

The **NAUG** Public Domain Library now includes lastPATCH, John Link's patching program for AppleWorks 4.01. lastPATCH is a collection of 18 patches that let you customize AppleWorks. For example, lastPATCH modifies AppleWorks 4.01 so you do not have to press the Return Key after you make a menu selection, reverses AppleWorks' "Yes/No" queries, moves the Apple-Q Menu to the upper right-hand corner of your screen, lets you change many of the messages on the AppleWorks screen, and lets you make other changes to the program. lastPATCH includes installation and de-installation routines that automatically install and de-install the patch from your copy of AppleWorks.

lastPATCH is the AppleWorks 4.01-compatible version of SuperPatch, Mr. Link's popular patching program for earlier versions of AppleWorks. Our thanks to Mr. Link for contributing lastPATCH to the **NAUG** library.

MS-DOS Utilities

NAUG's new MS-DOS Utilities Disk lets Apple IIGS owners read from and write to any MS-DOS formatted floppy disk, hard disk, floptical disk, Syquest cartridge, and other removable media connected to an Apple IIGS computer running System 5.02 or later. The utilities are also compatible with Apple's 3.5-inch SuperDrive and Applied Engineering's High Density Drive, PC Transporter 5.25-inch drives, and PC Transporter MS-DOS partitions under GS/OS on a hard drive.

The MS-DOS Utilities Disk lets Apple II owners transfer data to and from many MS-DOS applications. For example, the utilities let you use WordPerfect to create a document on an MS-DOS system, save the document in a text file, and read the text file into AppleWorks on your Apple II. You can then edit the document, use the MS-DOS utilities to save it as a text file on the MS-DOS disk, and read the file with WordPerfect.

The MS-DOS Utilities Disk is shareware. You send the author, Peter Watson, $15 after you get the disk from **NAUG**. 3.5-inch disk only ($6).

NAUG members who own MS-DOS computers should also consider Cross-Works, an easy-to-use commercial program that lets you transfer data files between MS-DOS and Apple II computers. Cross-Works, which includes cables to connect your computers, goes beyond the MS-DOS utilities by automatically translating files between most popular MS-DOS applications (including WordPerfect, Lotus 1-2-3, and dBase) and AppleWorks. A favorable review of Cross-Works appeared in the May 1989 issue of the ***AppleWorks Forum***. Cross-Works lists for $99.95 but costs $69.95 from Quality Computers and other discount dealers.

EntoStuff

NAUG members and teachers interested in insects will appreciate Mark O'Brien's EntoStuff, a comprehensive data base that lists more than 60 vendors, companies, organizations, and other sources of entomologically-related information and materials for teachers, students, entomologists, naturalists, and biologists. The data base helps answer questions such as: "Where can I buy insect nets and pins?", "Who sells entomology software?", and "Where can I buy beekeeping supplies, insect books, and journals?"

The EntoStuff data base is compatible with all versions of AppleWorks. Our thanks to Mr. O'Brien for donating EntoStuff to the **NAUG** library.

How to Get Disks

Unless otherwise noted, all disks are available in both 5.25-inch ($4) and 3.5-inch ($6) format, plus $2 s/h *per order*. Order from: Public Domain Library, **NAUG**, Box 87453, Canton, Michigan 48187; (313) 454-1115; Fax: (313) 454-1965. **NAUG** accepts Visa and MasterCard. All **NAUG** disks (except system disks provided by Apple Computer) are also available for downloading from **NAUG**'s electronic bulletin board (the Electronic Forum).

NAUG Membership

Name _____

Member Nº, if renewing _____

Address _____

_____

City _____ State _____

Zip _____ Country _____

Home Phone _____

Work Phone _____

The ***AppleWorks Forum*** — 10 monthly issues, shipped as follows:

Circle One:	One Year	Two[1] Years
2nd Class postage - United States	$30	$60
2nd Class postage - Canada and Mexico	$40	$80
1st Class postage - United States	$46	$92
1st Class airmail - Canada and Mexico	$52	$104
Surface mail outside North America	$44	$88
Airmail outside North America	$67	$134
NAUG on Disk [2]	$90	$180

Total $_____

☐ Check ☐ MC/Visa ☐ PO # [3] _____

Credit Card Account # _____

Expiration Date _____

Signature _____

[1] *Avoids future price increases.*
[2] *U.S. Price. International orders by credit card only.*
[3] *Payment must accompany all purchase orders.*

NAUG shares members' addresses with other users groups and selected vendors. If you do not want to receive mail from these agencies, check here: ☐

AppleWorks is a trademark of Apple Computer, under license to Quality Computers.

Electronic Index Update

Enter the default values for these categories: Volume #: 9 • Issue #: 1 • Date: January 1994.

AppleWorks 4 Primer • 2 • How to Link the Data Base and Word Processor • Nelken, Will • word processor; data bases; AppleWorks 4; merging files; windows; glossaries

General Interest • 9 • Publications that Can Help You Repair Your Printer • Shapiro, Phil • repairs; printers; books; Howard Sams; ImageWriter; Flash Magazine; special offers; laser printers; LaserWriter

Special Offer • 11 • Special Closeout Prices for NAUG Members • N/A • Beagle Bros; Desk Accessories; BeagleWrite; clip-art; fonts; BeagleDraw; Program Writer

My Favorite Macro • 12 • How to Underline and Boldface Selected Text • Johnson, Keith • macros; word processor; printing effects

My Favorite Template • 15 • How to Create a Personal Organizer • Bernstein, Mitchell; Field, Cynthia E. • spreadsheets; personal organizers; calendars; PIMs

Corrections • 24 • Corrections to the AppleWorks Forum • N/A • corrections; AppleWorks Forum

General Interest • 25 • What Advanced Users Should Know about AppleWorks 4 • Brandt, Randy • AppleWorks 4; TimeOut; SuperPatch; lastPATCH; AfterWork; UltraMacros; memory addresses; easter egg

General Interest • 26 • Status of existing TimeOut Applications • Brandt, Randy • AppleWorks 4; upgrades; updates; TimeOut

General Interest • 27 • A History of AppleWorks Enhancements • Brandt, Randy • AppleWorks; upgrades; updates; Jeeves

General Interest • 28 • TAPL Memory Addresses • Brandt, Randy • AppleWorks 4; memory addresses; UltraMacros

General Interest • 30 • Status Report: Other AppleWorks 3.0 Enhancements • Brandt, Randy • AppleWorks; AlphaCheck; Payroll Plus; Magic File Cabinet; Magic Newsgroup; DiskTools; About Time; AmperMacros; EuroWorks; S. A. AuTeur; Office Productivity Software; ACTAsoft

Public Domain Update • 31 • New Disks in the NAUG Library • N/A • public domain; lastPATCH; MS-DOS Utilities; EntoStuff; PC Transporter

New Keywords: About Time; AfterWork; BeagleDraw; BeagleWrite; easter egg; EntoStuff; Flash Magazine; glossaries; Jeeves; lastPATCH; Magic Newsgroup; memory addresses; MS-DOS Utilities; personal organizers; PIMs; Program Writer

NAUG Classifieds

Holiday Special: Bible templates for Apple II's. Entire book NIV ($30.00) or KJV ($25.00) on 3.5 floppies. Rev. Coselmon, 16636 W. 132nd Cir., Olathe, KS 66062; (913) 764-8095.

AppleWorks Forum

SECOND CLASS
Postage Paid at Plymouth, MI and other offices

NAUG
National AppleWorks Users Group
Box 87453, Canton, Michigan 48187
(313) 454-1115 Fax: (313) 454-1965
BBS: (615) 359-8238

TIME VALUE MATERIAL